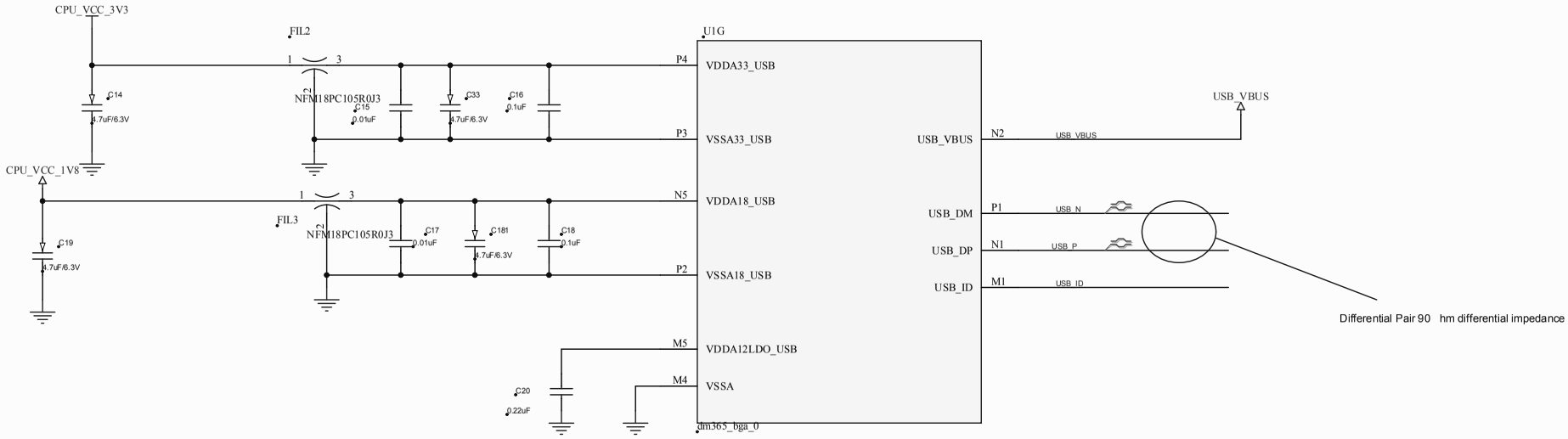

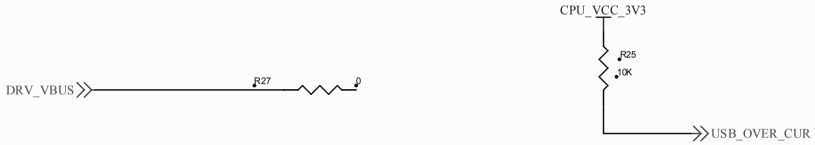

USB H st M de:
- M ve jumper between PIn2 and Pin3 n J4

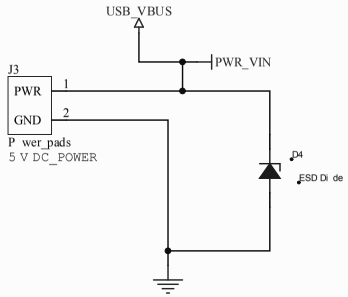

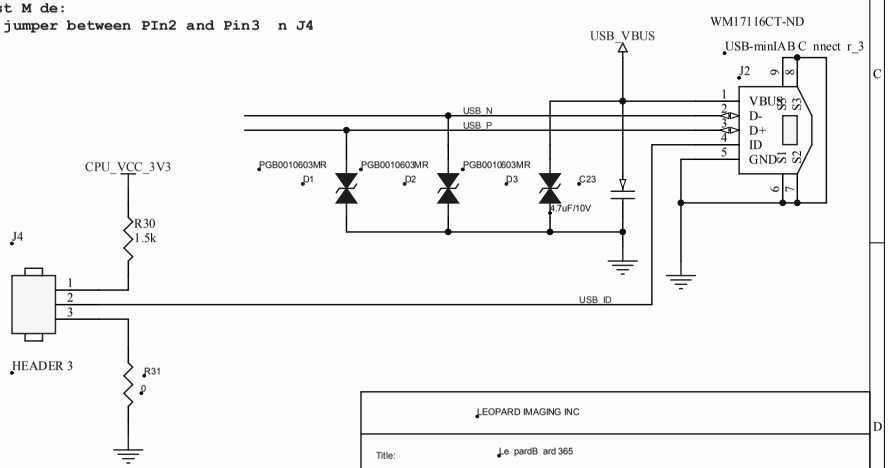

LEOPARD IMAGING INC		
Title:	Le pardB ard 365	
Page C ntents:	DM365 USB	
Size:	DWG NO	Revisi n: 1.3
Date:	Sheet 4 f 21	