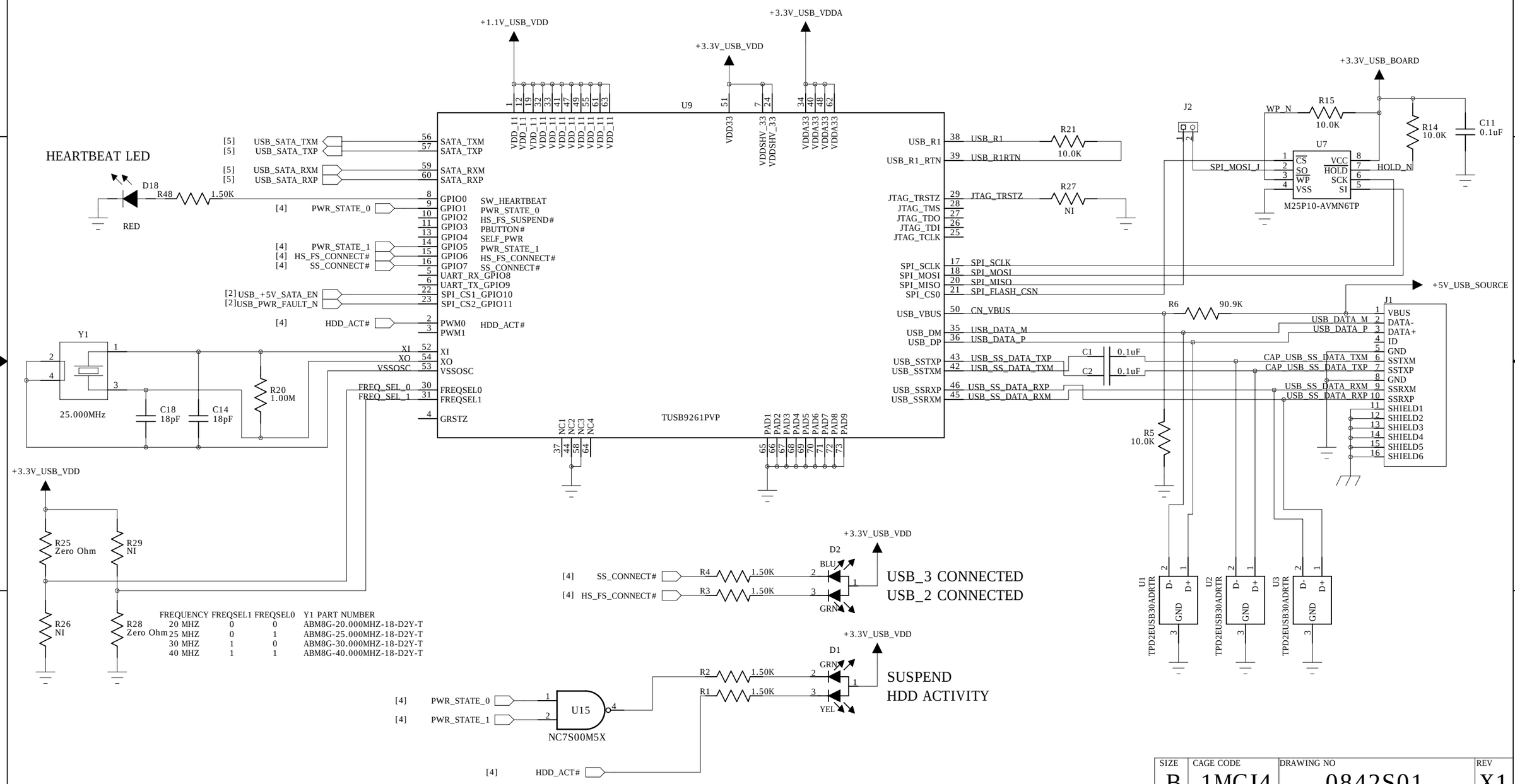

SIZE	CAGE CODE	DRAWING NO	REV
B	1MCJ4	0842S01	X1
SCALE: N/A	0842S01.SCH	SHEET:4 OF 5	