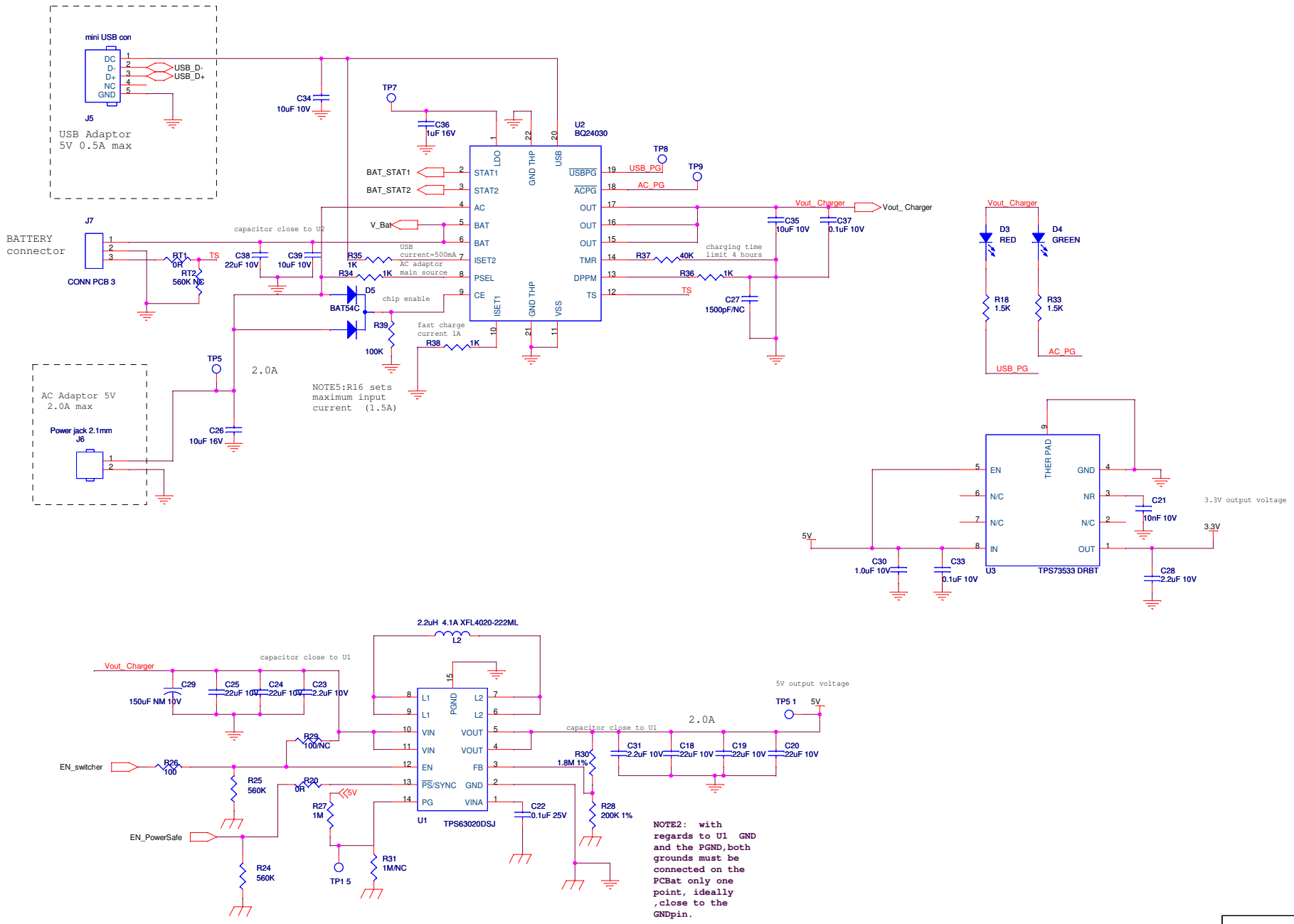

Title	power supply	
Size Custom	Document Number <Doc>	Rev A01
Date: Wednesday, September 07, 2011	Sheet 1 of 1	