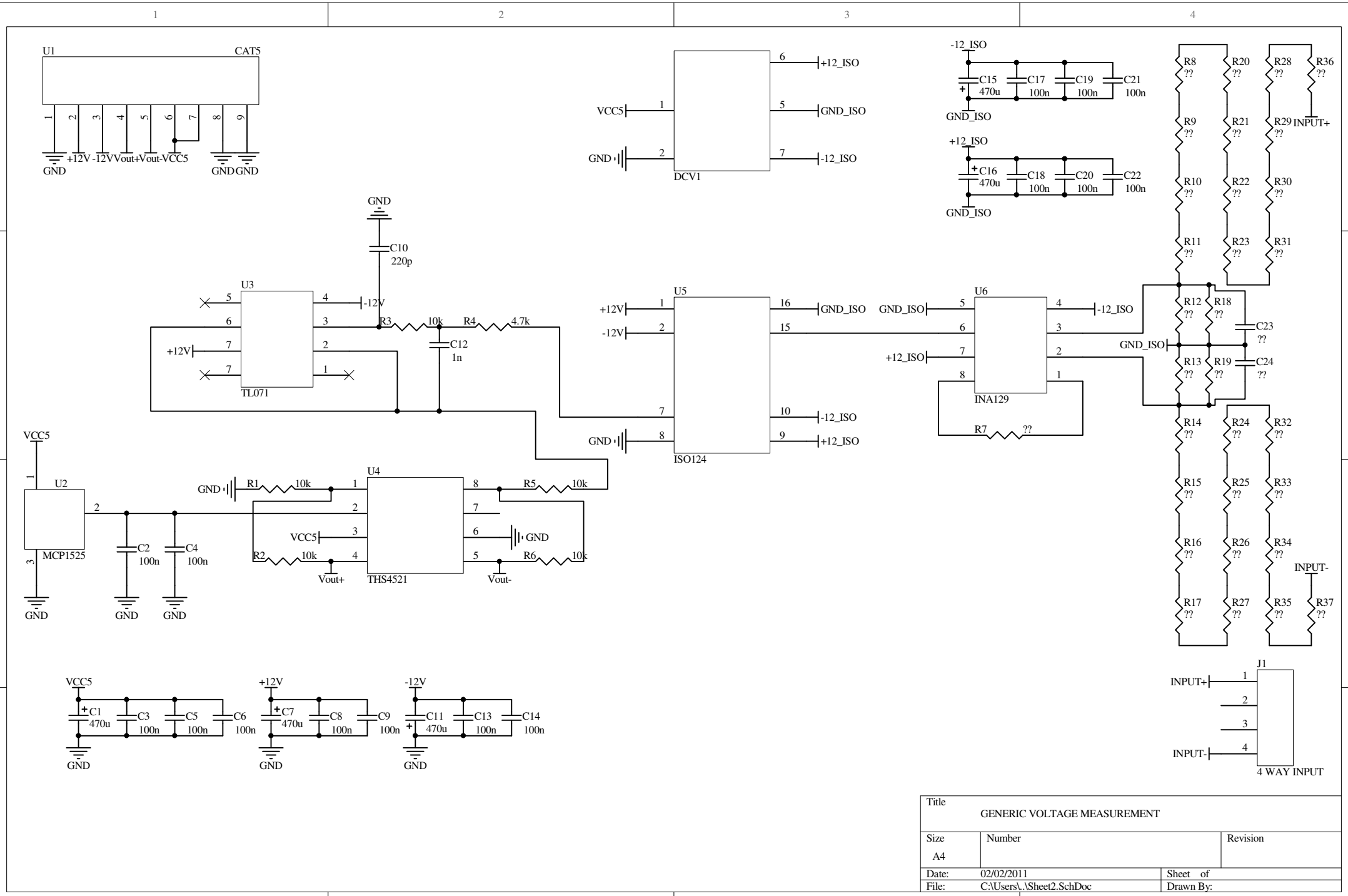


| | | |
|---|---|---|
| Title | GENERIC VOLTAGE MEASUREMENT | |
| Size A4 | Number | Revision |
| Date: 02/02/2011 | | Sheet of |
| File: C:\Users\..\Sheet2.SchDoc | | Drawn By: |