DISCRETE POWER SUPPLY

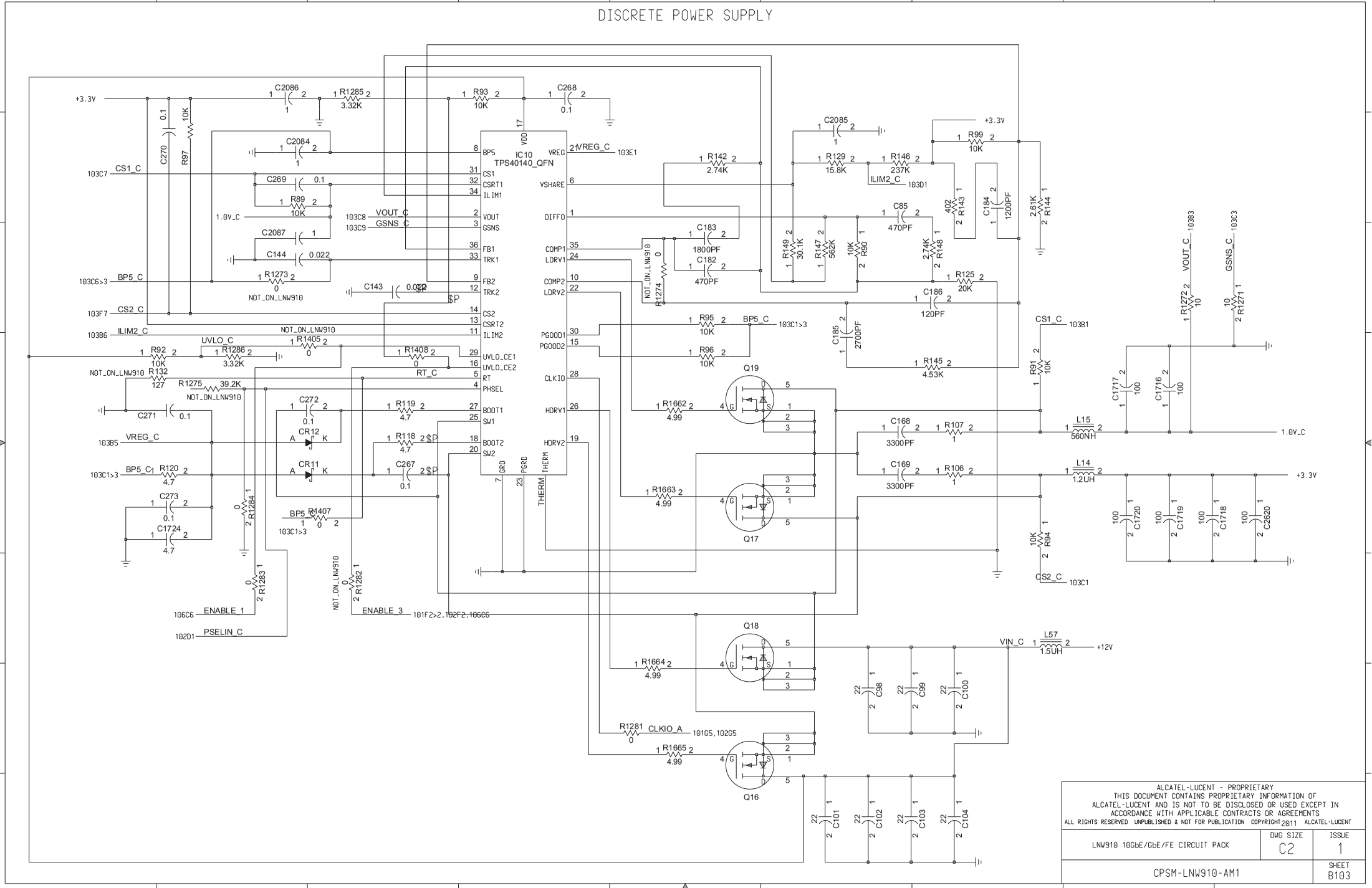

ALCATEL-LUCENT - PROPRIETARY
THIS DOCUMENT CONTAINS PROPRIETARY INFORMATION OF ALCATEL-LUCENT AND IS NOT TO BE DISCLOSED OR USED EXCEPT IN ACCORDANCE WITH APPLICABLE CONTRACTS OR AGREEMENTS
ALL RIGHTS RESERVED UNPUBLISHED & NOT FOR PUBLICATION COPYRIGHT 2011 ALCATEL-LUCENT

LNW910 10GbE/GbE/FE CIRCUIT PACK	DWG SIZE C2	ISSUE 1
CPSM-LNW910-AM1		SHEET B103