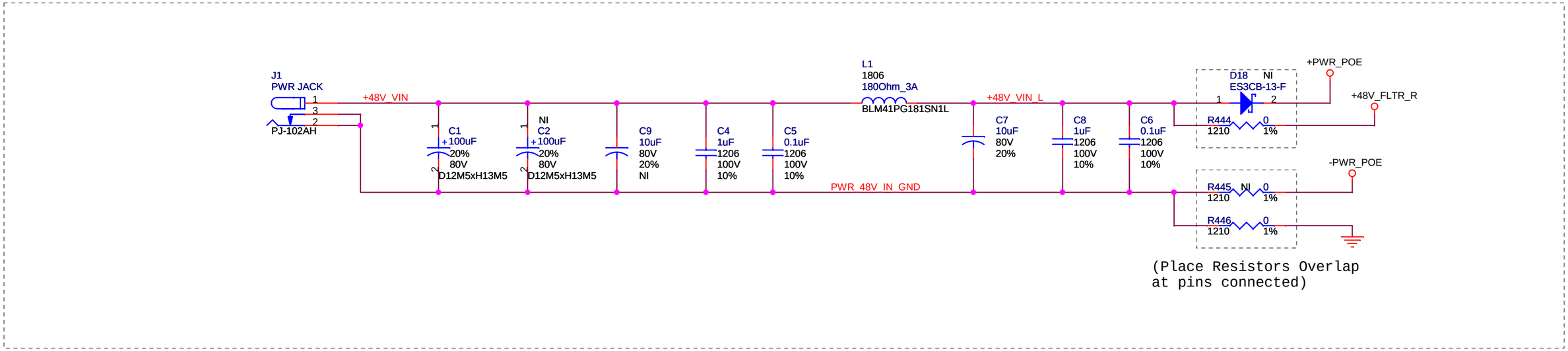
J1
PWR JACK
PJ-102AH
+48V_VIN
C1
+100uF
20%
80V
D12M5xH13M5
NI
C2
+100uF
20%
80V
D12M5xH13M5
C9
10uF
80V
20%
NI
C4
1uF
1206
100V
10%
C5
0.1uF
1206
100V
10%
L1
1806
180Ohm_3A
BLM41PG181SN1L
PWR_48V_IN_GND
+48V_VIN_L
C7
10uF
80V
20%
C8
1uF
1206
100V
10%
C6
0.1uF
1206
100V
10%
D18 NI
ES3CB-13-F
R444
1210
0
1%
+PWR_POE
+48V_FLTR_R
R445 NI
1210
0
1%
-PWR_POE
R446
1210
0
1%
(Place Resistors Overlap
at pins connected)

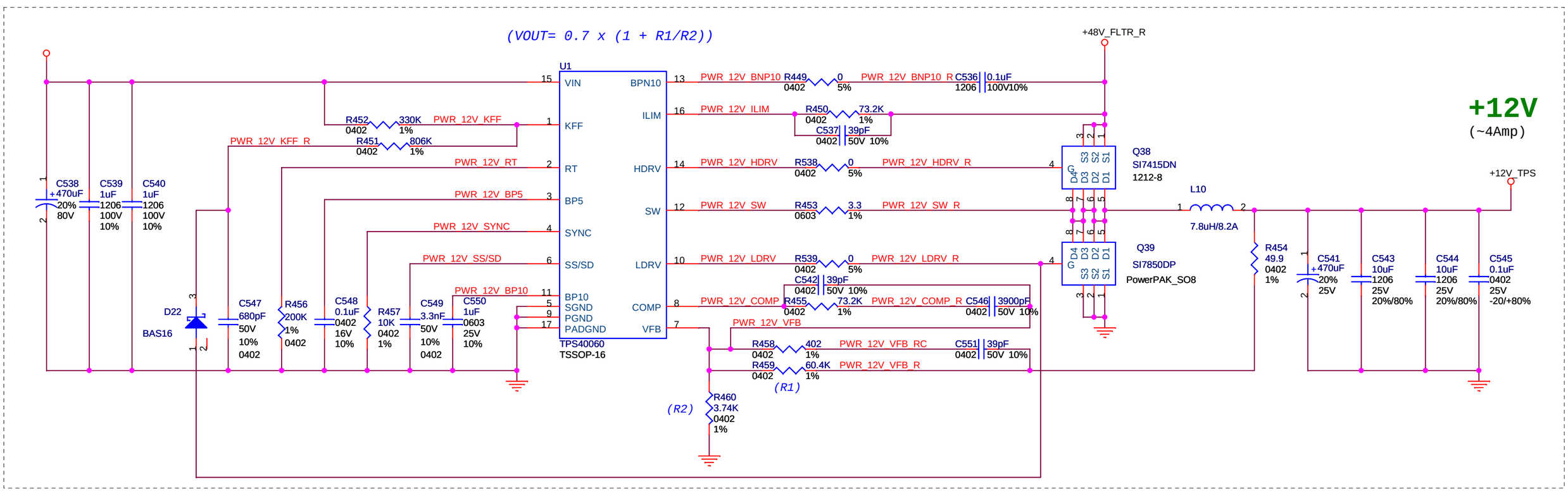
(VOUT= 0.7 x (1 + R1/R2))
+48V_FLTR_R
U1
VIN
BPN10
ILIM
HDRV
SW
LDRV
COMP
VFB
KFF
RT
BP5
SYNC
SS/SD
BP10
SGND
PGND
PADGND
TPS40060
TSSOP-16
PWR_12V_BNP10
R449
0
5%
PWR_12V_BNP10_R
C536
0.1uF
1206
100V10%
PWR_12V_ILIM
R450
73.2K
0402
1%
C537
39pF
0402
50V 10%
PWR_12V_HDRV
R538
0
5%
PWR_12V_HDRV_R
PWR_12V_SW
R453
3.3
0603
1%
PWR_12V_SW_R
PWR_12V_LDRV
R539
0
5%
PWR_12V_LDRV_R
C542
39pF
0402
50V 10%
PWR_12V_COMP
R455
73.2K
0402
1%
PWR_12V_COMP_R
C546
3900pF
0402
50V 10%
PWR_12V_VFB
R458
402
0402
1%
PWR_12V_VFB_RC
C551
39pF
0402
50V 10%
R459
60.4K
0402
1%
PWR_12V_VFB_R
(R1)
(R2)
R460
3.74K
0402
1%
R452
330K
0402
1%
PWR_12V_KFF
R451
806K
0402
1%
PWR_12V_KFF_R
PWR_12V_RT
PWR_12V_BP5
PWR_12V_SYNC
PWR_12V_SS/SD
PWR_12V_BP10
C538
+470uF
20%
80V
C539
1uF
1206
100V
10%
C540
1uF
1206
100V
10%
D22
BAS16
C547
680pF
50V
10%
0402
R456
200K
1%
0402
C548
0.1uF
0402
16V
10%
R457
10K
0402
1%
C549
3.3nF
50V
10%
0402
C550
1uF
0603
25V
10%
Q38
SI7415DN
1212-8
Q39
SI7850DP
PowerPAK_SO8
L10
7.8uH/8.2A
+12V
(~4Amp)
+12V_TPS
R454
49.9
0402
1%
C541
+470uF
20%
25V
C543
10uF
1206
25V
20%/80%
C544
10uF
1206
25V
20%/80%
C545
0.1uF
0402
25V
-20/+80%