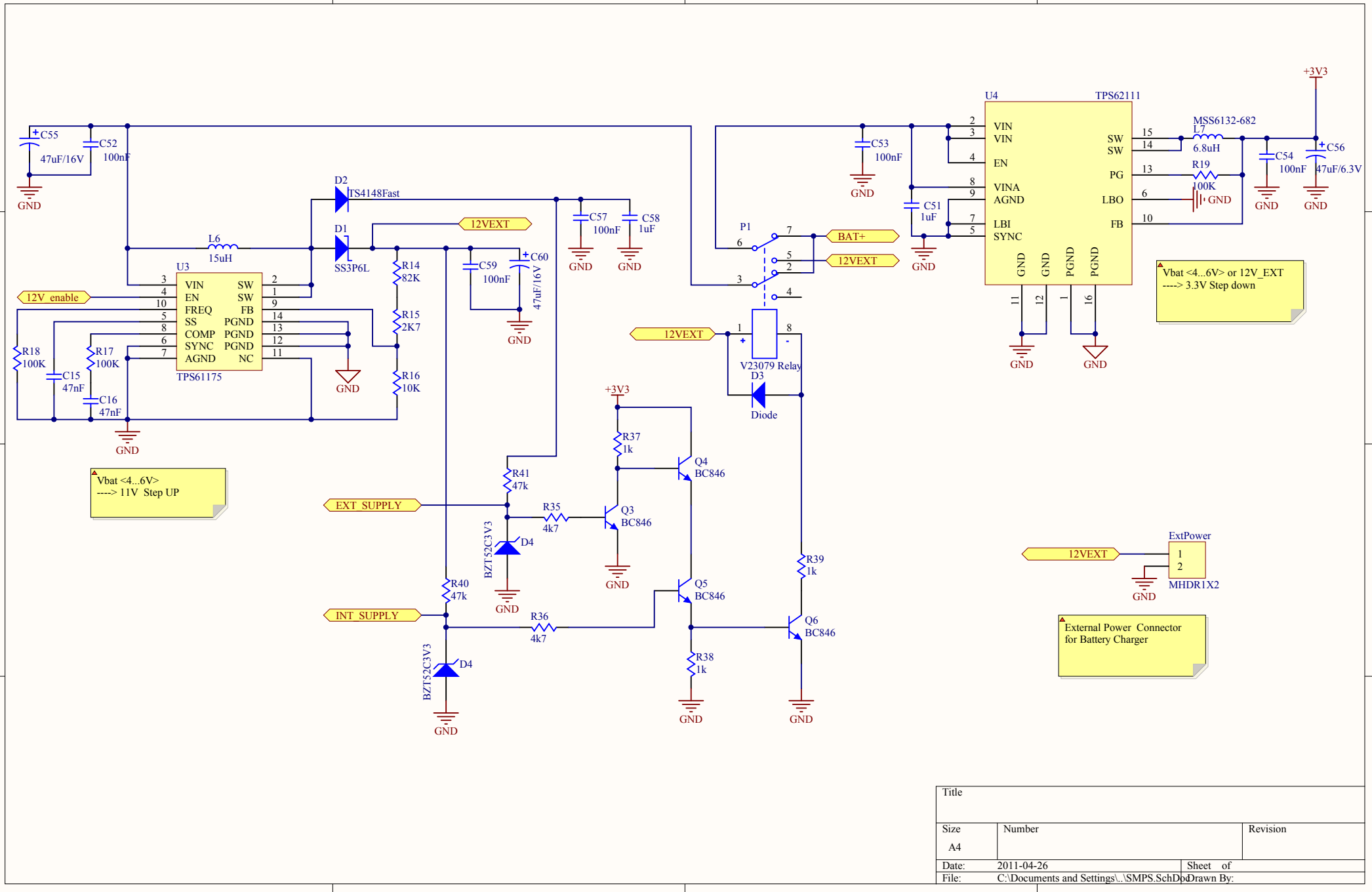

Title		
Size A4	Number	Revision
Date: 2011-04-26	Sheet of	
File: C:\Documents and Settings\...\SMPS.SchDoc	Drawn By:	