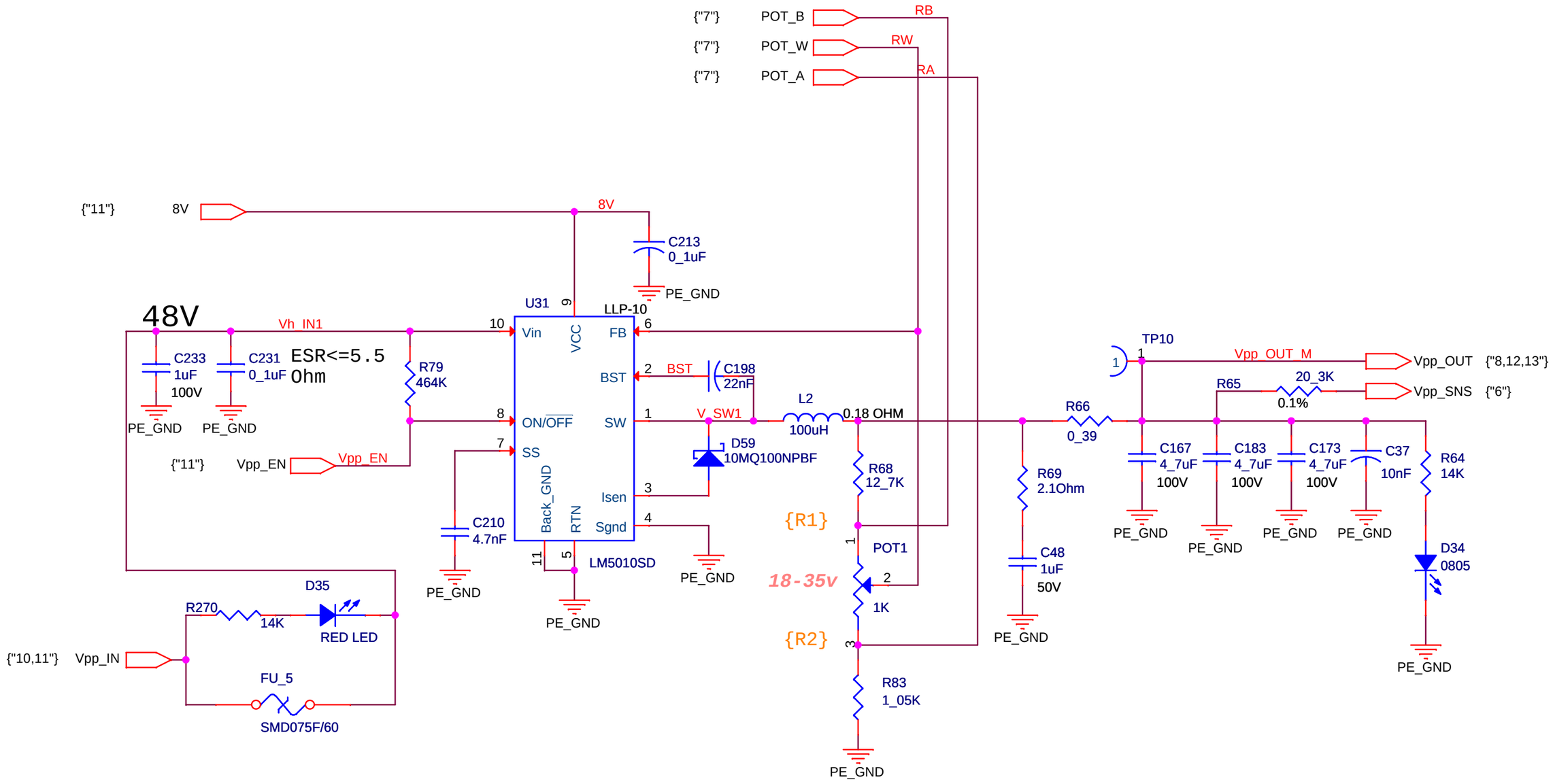

Title	SPARTACUS - Vh PS		
Size A4	Document Number BRD-04000		Rev A
Date: Monday, January 30, 2012		Sheet 19 of 20	