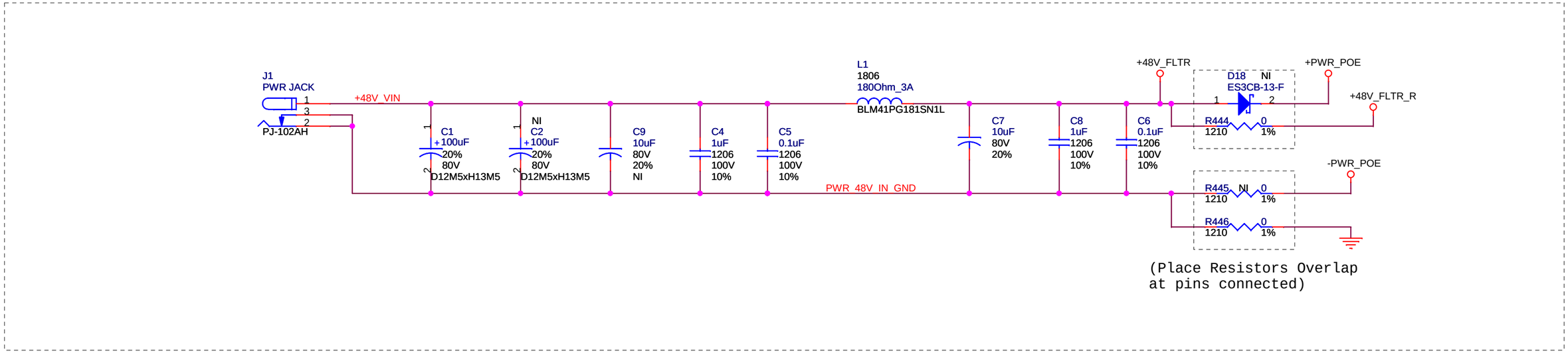

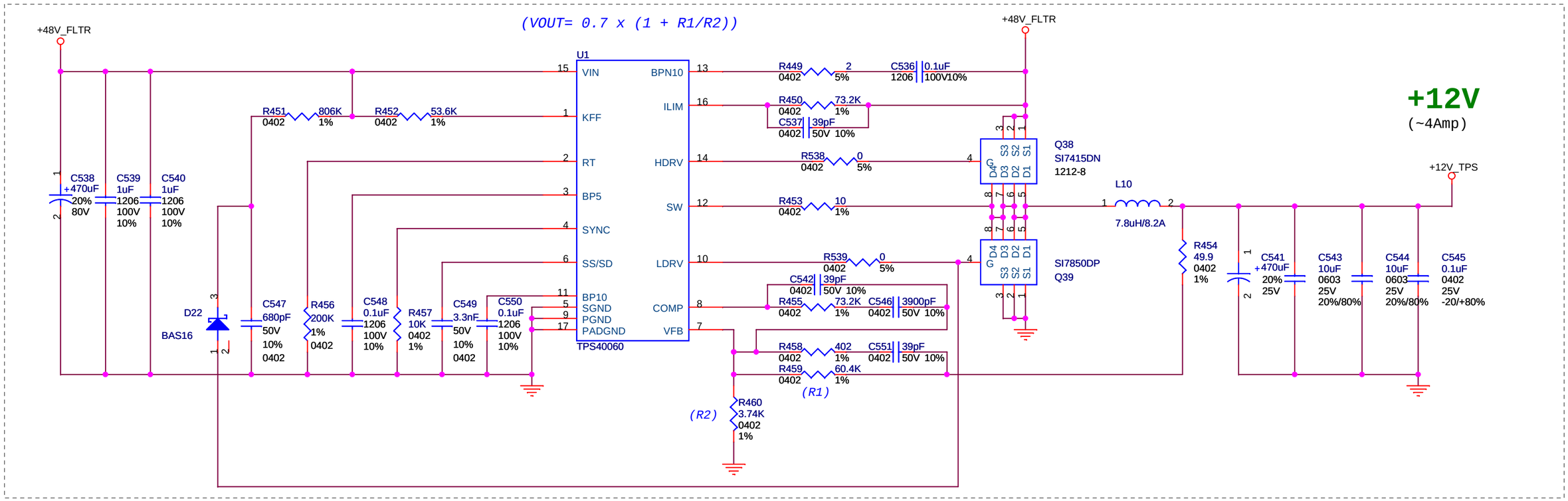

Title	Engineer:	Drawn By:	
Size	Document Number	Sheet	of
			of