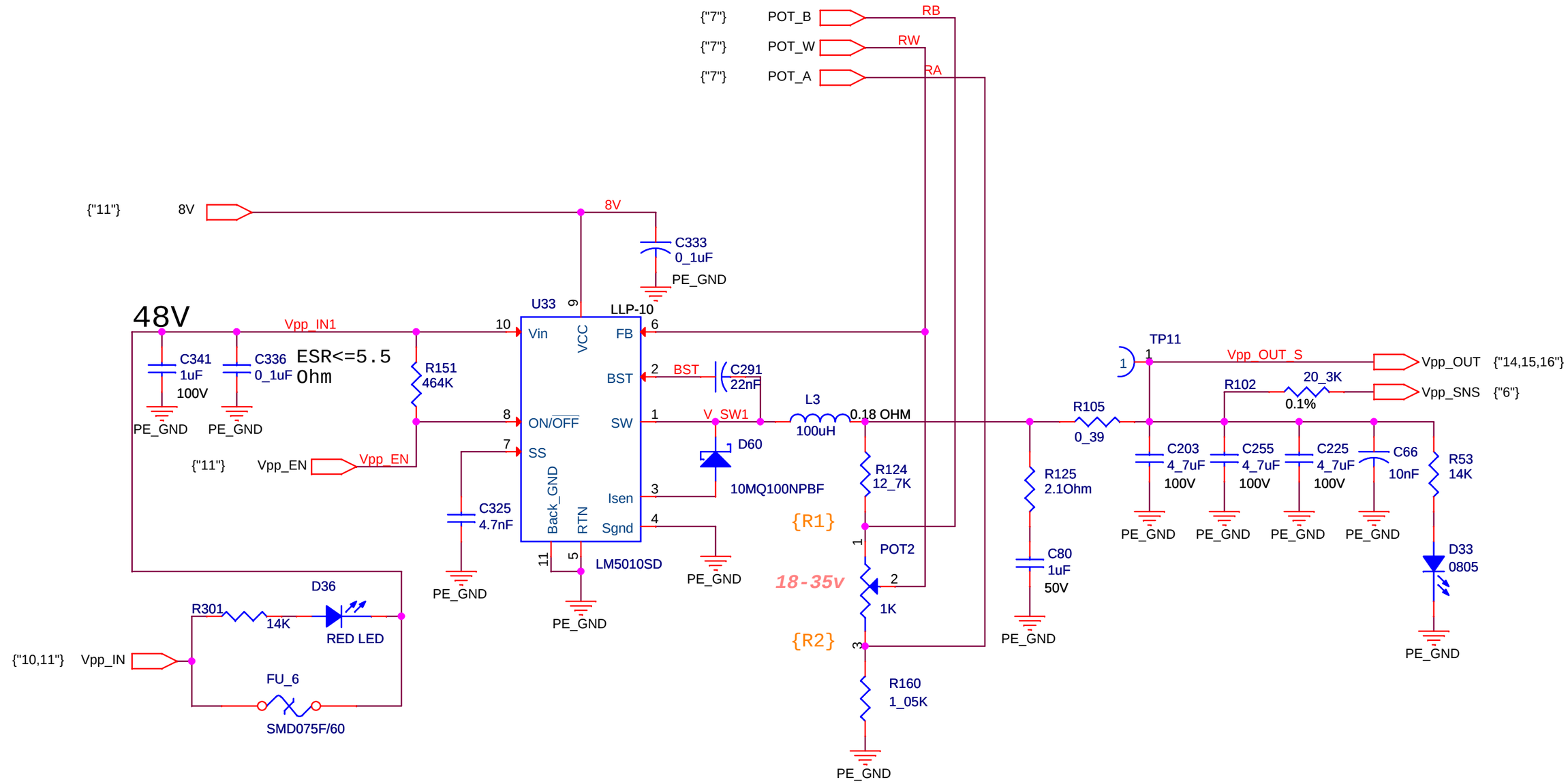

Title	SPARTACUS - Vh PS	
Size A4	Document Number BRD-04000	Rev A
Date: Wednesday, February 01, 2012	Sheet 20 of 20	