POWER

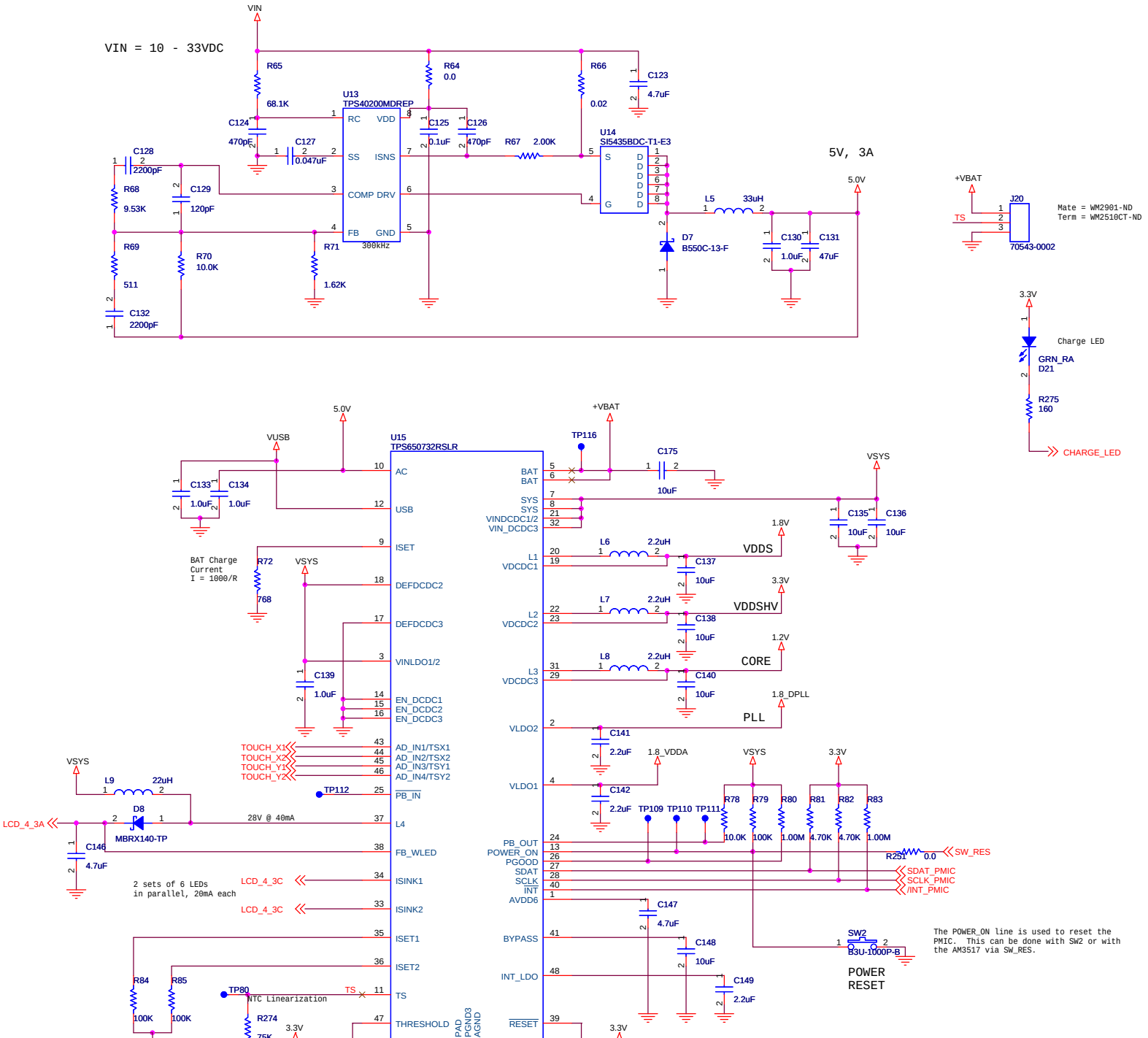
VIN = 10 - 33VDC
VIN
R65
68.1K
R64
0.0
R66
0.02
C123
4.7uF
U13
TPS40200MDREP
RC
VDD
SS
ISNS
COMP
DRV
FB
GND
300kHz
C124
470pF
C127
0.047uF
C125
0.1uF
C126
470pF
R67
2.00K
U14
SI5435BDC-T1-E3
S
G
D
C128
2200pF
R68
9.53K
C129
120pF
R69
511
R70
10.0K
R71
1.62K
C132
2200pF
5V, 3A
5.0V
L5
33uH
D7
B550C-13-F
C130
1.0uF
C131
47uF
+VBAT
J20
TS
Mate = WM2901-ND
Term = WM2510CT-ND
70543-0002
3.3V
Charge LED
GRN_RA
D21
R275
160
CHARGE_LED
5.0V
VUSB
U15
TPS650732RSLR
C133
1.0uF
C134
1.0uF
AC
USB
ISET
BAT Charge
Current
I = 1000/R
R72
768
VSYS
DEFDCDC2
DEFDCDC3
VINLDO1/2
C139
1.0uF
EN_DCDC1
EN_DCDC2
EN_DCDC3
TOUCH_X1
TOUCH_X2
TOUCH_Y1
TOUCH_Y2
AD_IN1/TSX1
AD_IN2/TSX2
AD_IN3/TSY1
AD_IN4/TSY2
TP112
PB_IN
L4
FB_WLED
ISINK1
ISINK2
ISET1
ISET2
TS
THRESHOLD
PAD
PGND3
AGND
BAT
SYS
VINDCDC1/2
VIN_DCDC3
L1
VDCDC1
L2
VDCDC2
L3
VDCDC3
VLDO2
VLDO1
PB_OUT
POWER_ON
PGOOD
SDAT
SCLK
INT
AVDD6
BYPASS
INT_LDO
RESET
+VBAT
TP116
C175
10uF
C135
10uF
C136
10uF
1.8V
VDDS
L6
2.2uH
C137
10uF
3.3V
VDDSHV
L7
2.2uH
C138
10uF
1.2V
CORE
L8
2.2uH
C140
10uF
1.8_DPLL
PLL
C141
2.2uF
1.8_VDDA
C142
2.2uF
TP109
TP110
TP111
R78
10.0K
R79
100K
R80
1.00M
R81
4.70K
R82
4.70K
R83
1.00M
R251
0.0
SW_RES
SDAT_PMIC
SCLK_PMIC
/INT_PMIC
C147
4.7uF
C148
10uF
C149
2.2uF
SW2
B3U-1000P-B
POWER
RESET
The POWER_ON line is used to reset the
PMIC. This can be done with SW2 or with
the AM3517 via SW_RES.
VSYS
L9
22uH
D8
MBRX140-TP
LCD_4_3A
28V @ 40mA
C146
4.7uF
2 sets of 6 LEDs
in parallel, 20mA each
LCD_4_3C
LCD_4_3C
R84
100K
R85
100K
TP80
NTC Linearization
R274
75K
3.3V