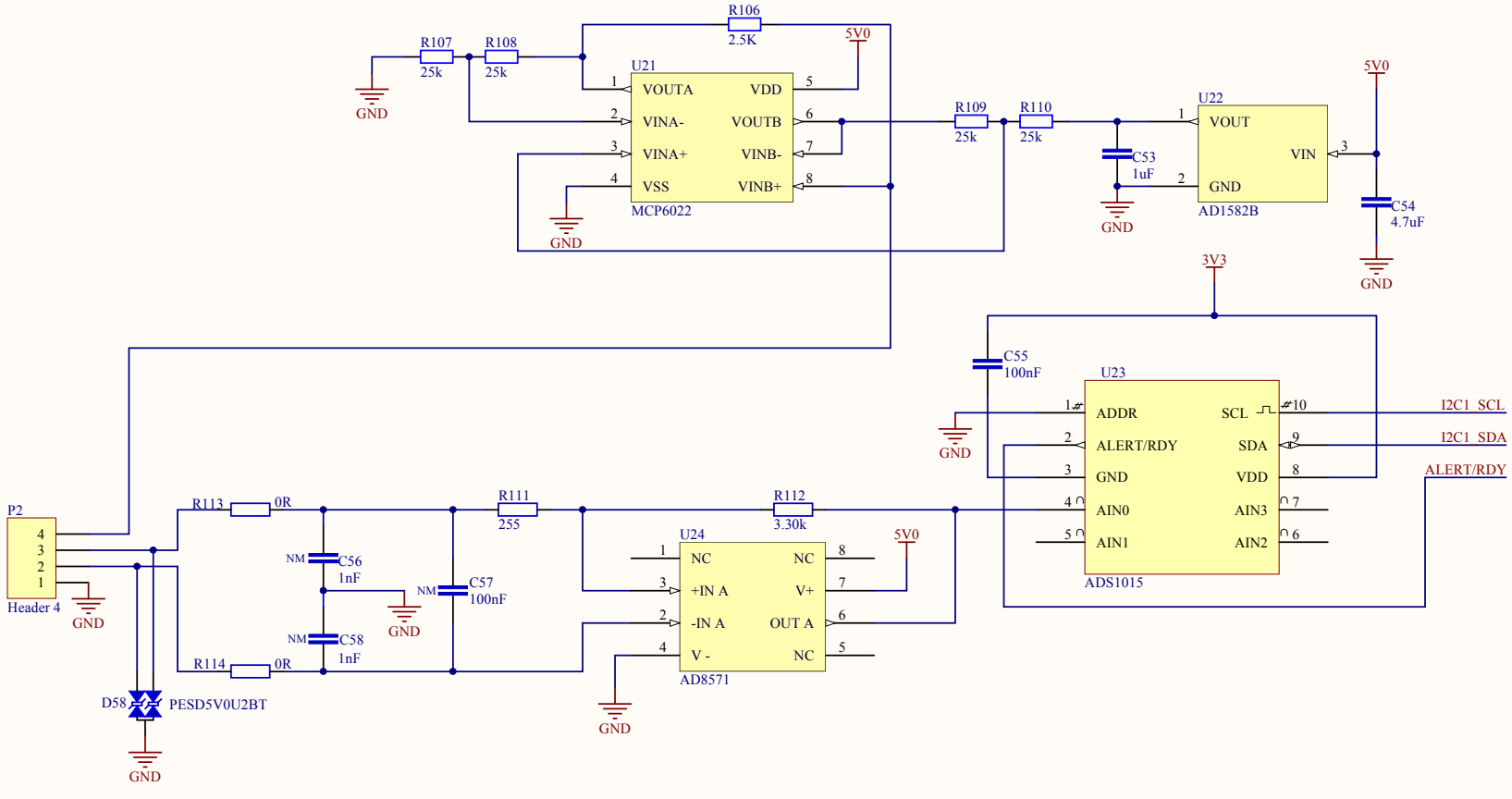

PT100

Title			Altium Limited L3, 12a Rodborough Rd Frenchs Forest NSW Australia 2086
Size: A4	Number:	Revision:	
Date: 3/21/2012	Time: 9:39:57 AM	Sheet of	
File: C:\Documents and Settings\All Users\Documents\Altium\AD 10\Templates\A4.SchDot			