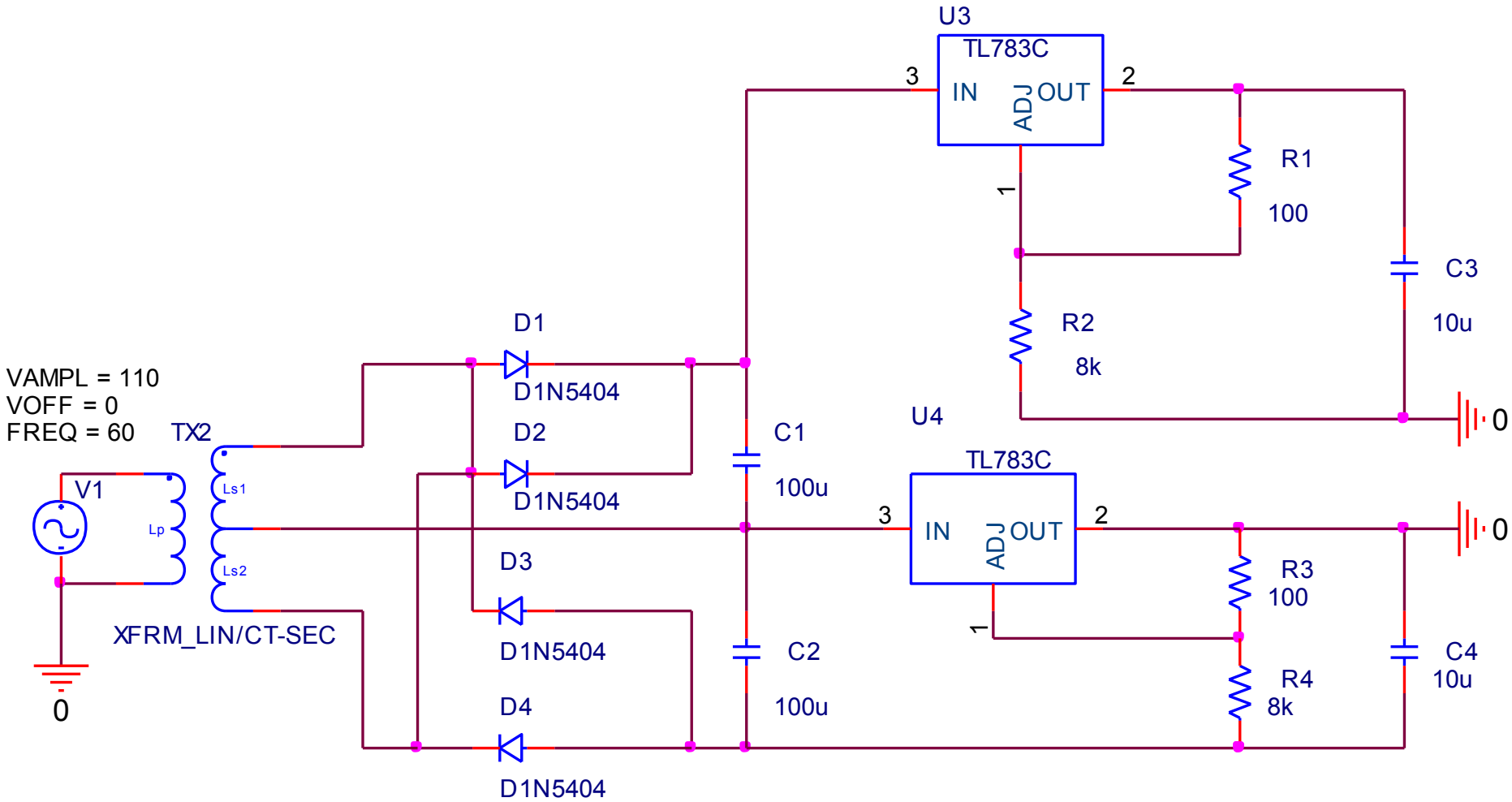Circuit Diagram (Power Supply)