Tue Oct 12 10:40:50 2010

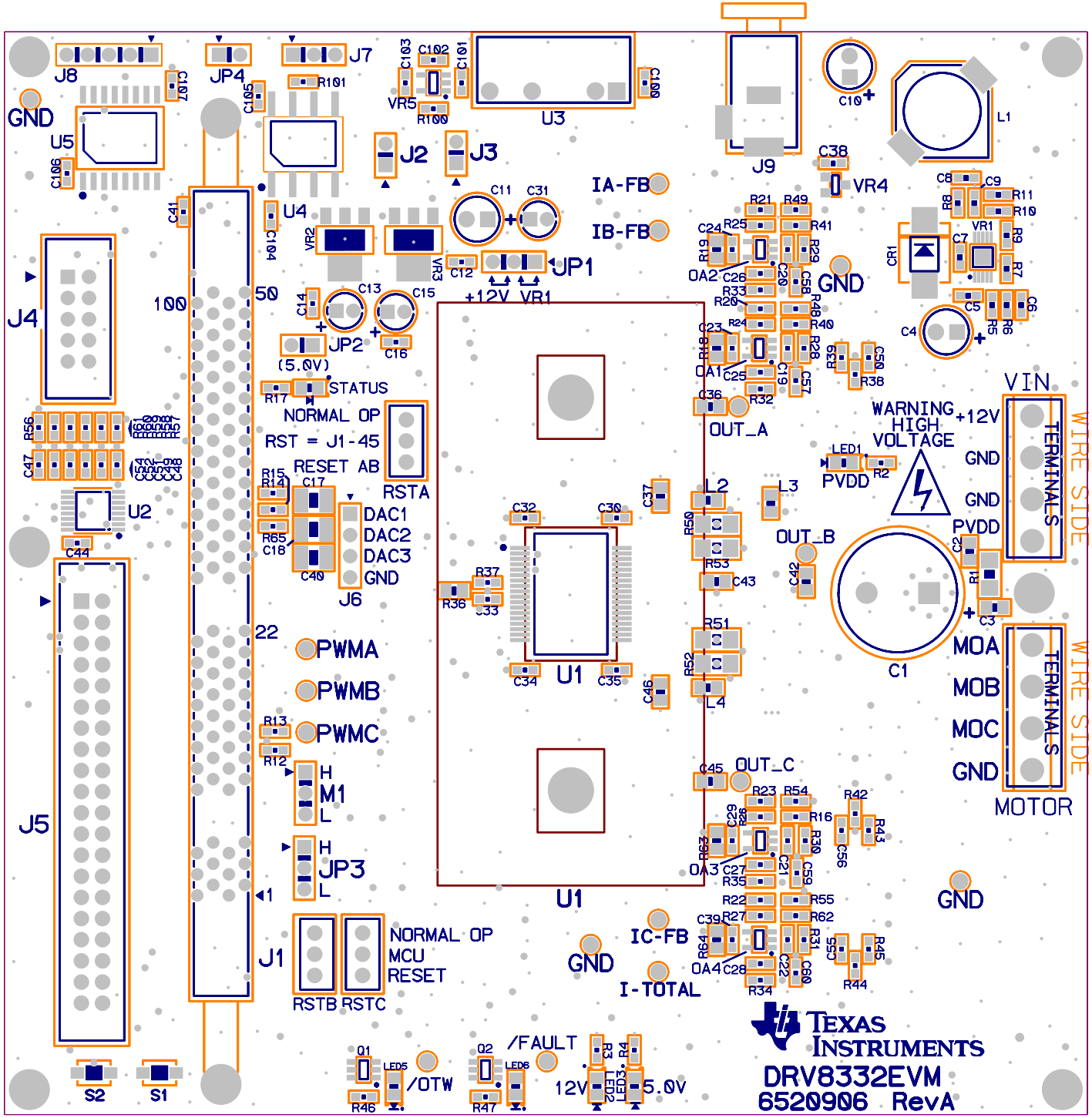

DRV8332EVM
6520906 RevA

TEXAS INSTRUMENTS

TOP ASSEMBLY (HID SILK)
TOP SILKSCREEN