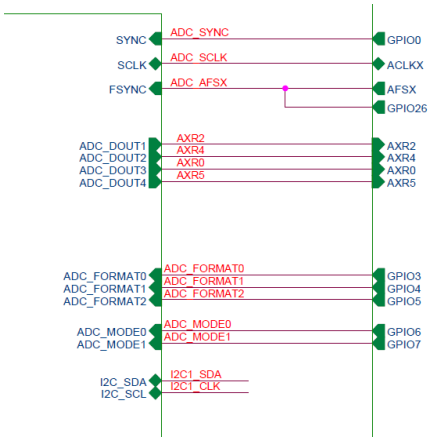
SYNC
ADC_SYNC
GPIO0
SCLK
ADC_SCLK
ACLKX
FSYNC
ADC_AFSX
AFSX
GPIO26
ADC_DOUT1
ADC_DOUT2
ADC_DOUT3
ADC_DOUT4
AXR2
AXR4
AXR0
AXR5
AXR2
AXR4
AXR0
AXR5
ADC_FORMAT0
ADC_FORMAT1
ADC_FORMAT2
ADC_FORMAT0
ADC_FORMAT1
ADC_FORMAT2
GPIO3
GPIO4
GPIO5
ADC_MODE0
ADC_MODE1
ADC_MODE0
ADC_MODE1
GPIO6
GPIO7
I2C_SDA
I2C_SCL
I2C1_SDA
I2C1_CLK