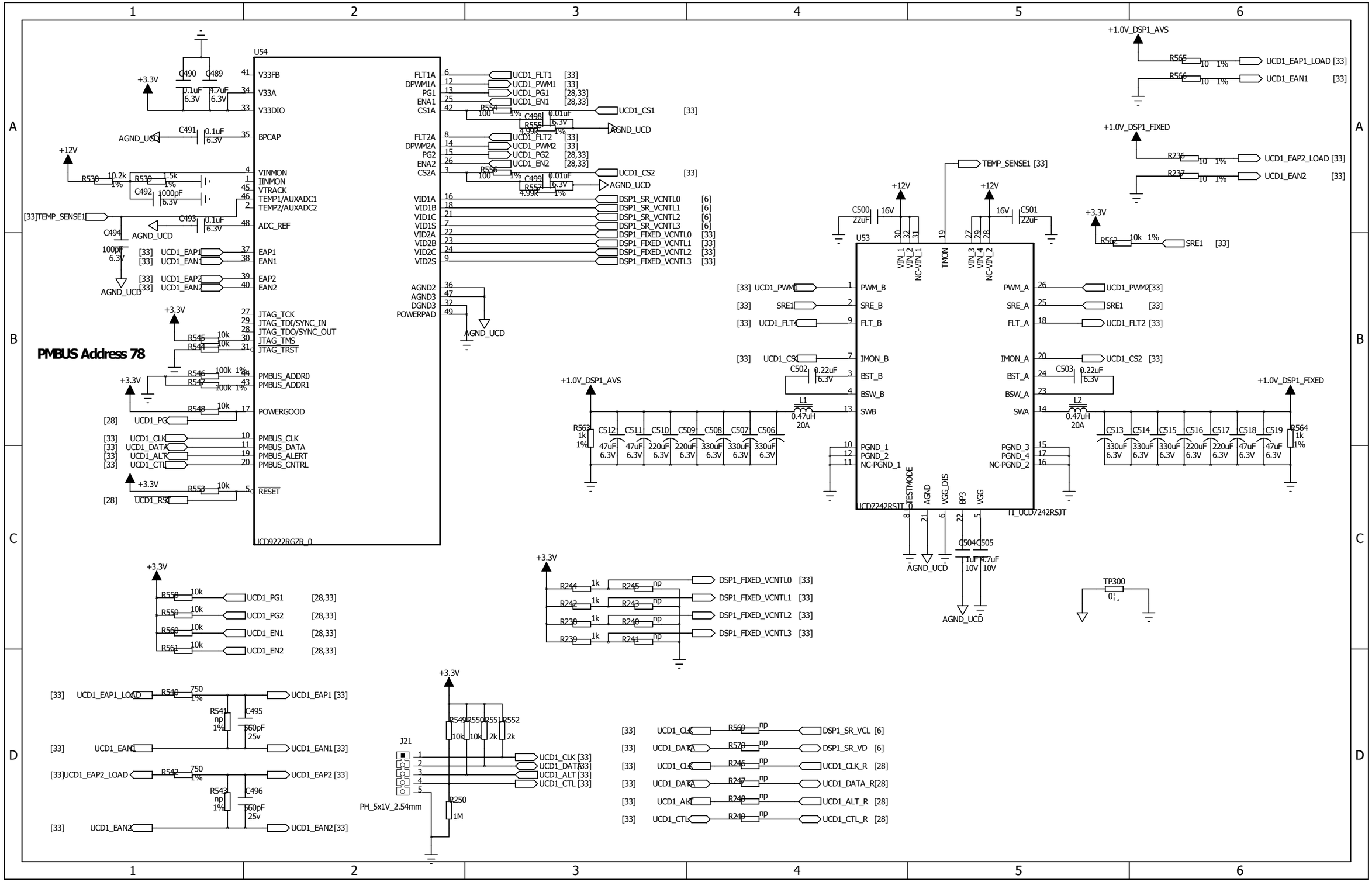
U54
UCD9222RGZR_0
PMBUS Address 78
U53
TI_UCD7242RSJT
UCD7242RSJT
+1.0V_DSP1_AVS
+1.0V_DSP1_FIXED
+3.3V
+12V
AGND_UCD
TEMP_SENSE1 [33]
J21
PH_5x1V_2.54mm
TP300