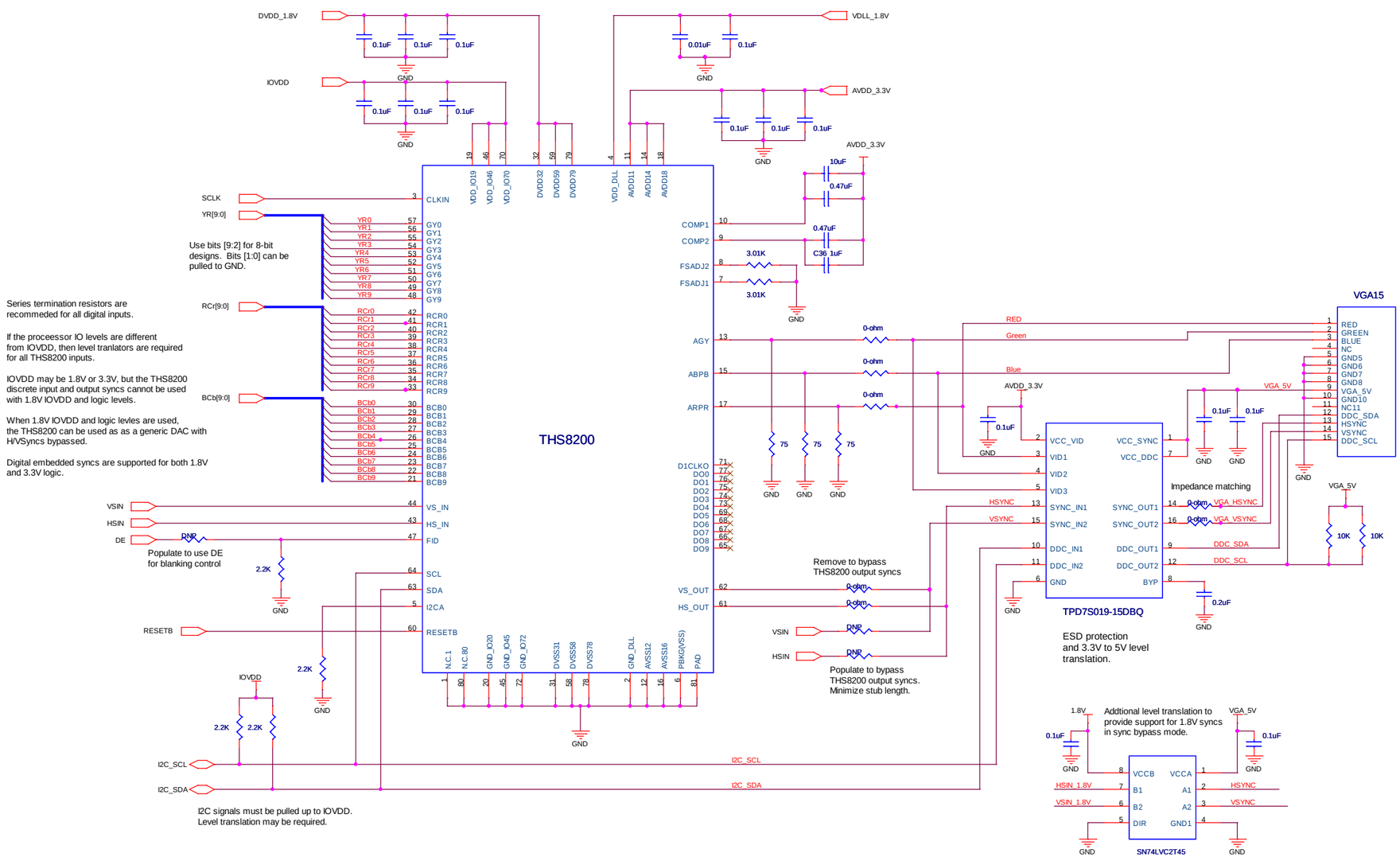

Title	THS8200 Graphics Support	
Size C	Document Number <Doc>	Rev 2.0
Date: Friday, July 15, 2011	Sheet 2 of 4	