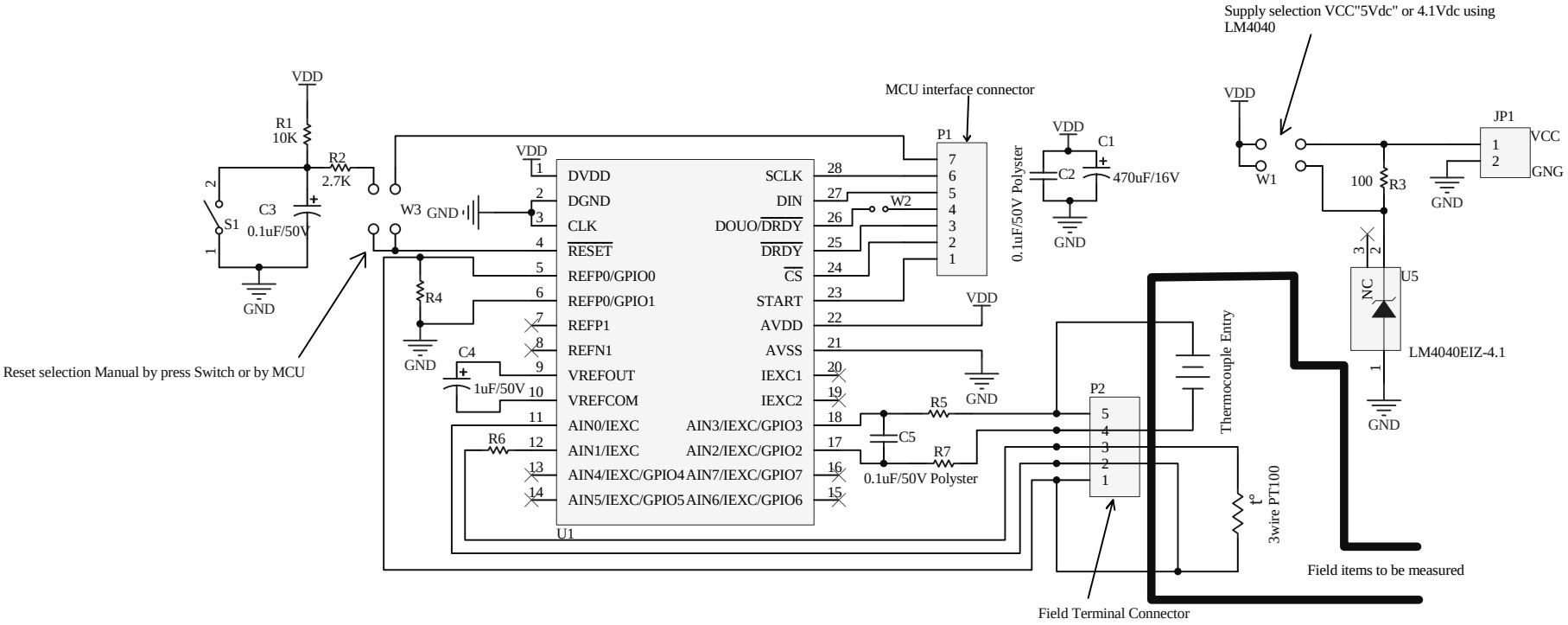

Task: RTD-7-CH REV1	
Developer: Mahmoud Helmy	Designer: Hesham Hamdy
Date: 3/28/2011 Time: 11:26:50 AM Sheet 4 of 9	
File: RTD-7-CH REV1.SchDoc	