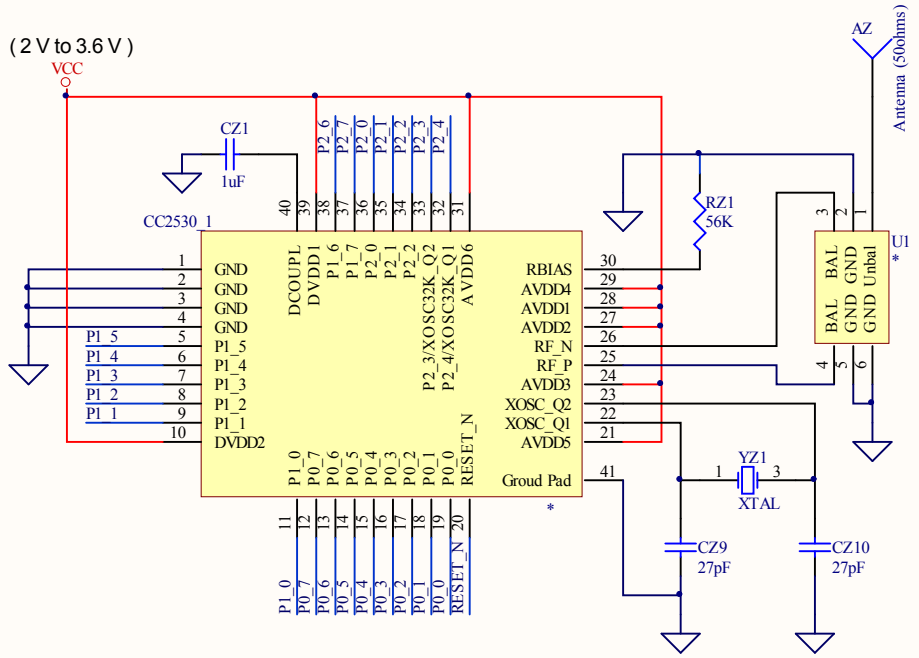

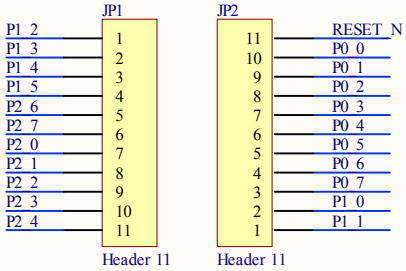

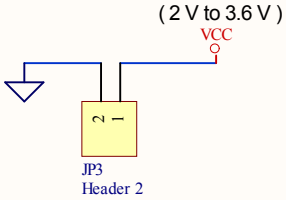

Title		
Size Letter	Number	Revision
Date: 27/09/2010		Sheet of
File: C:\Users\..\ZigBee_Schematic.SchDoc		Drawn By: