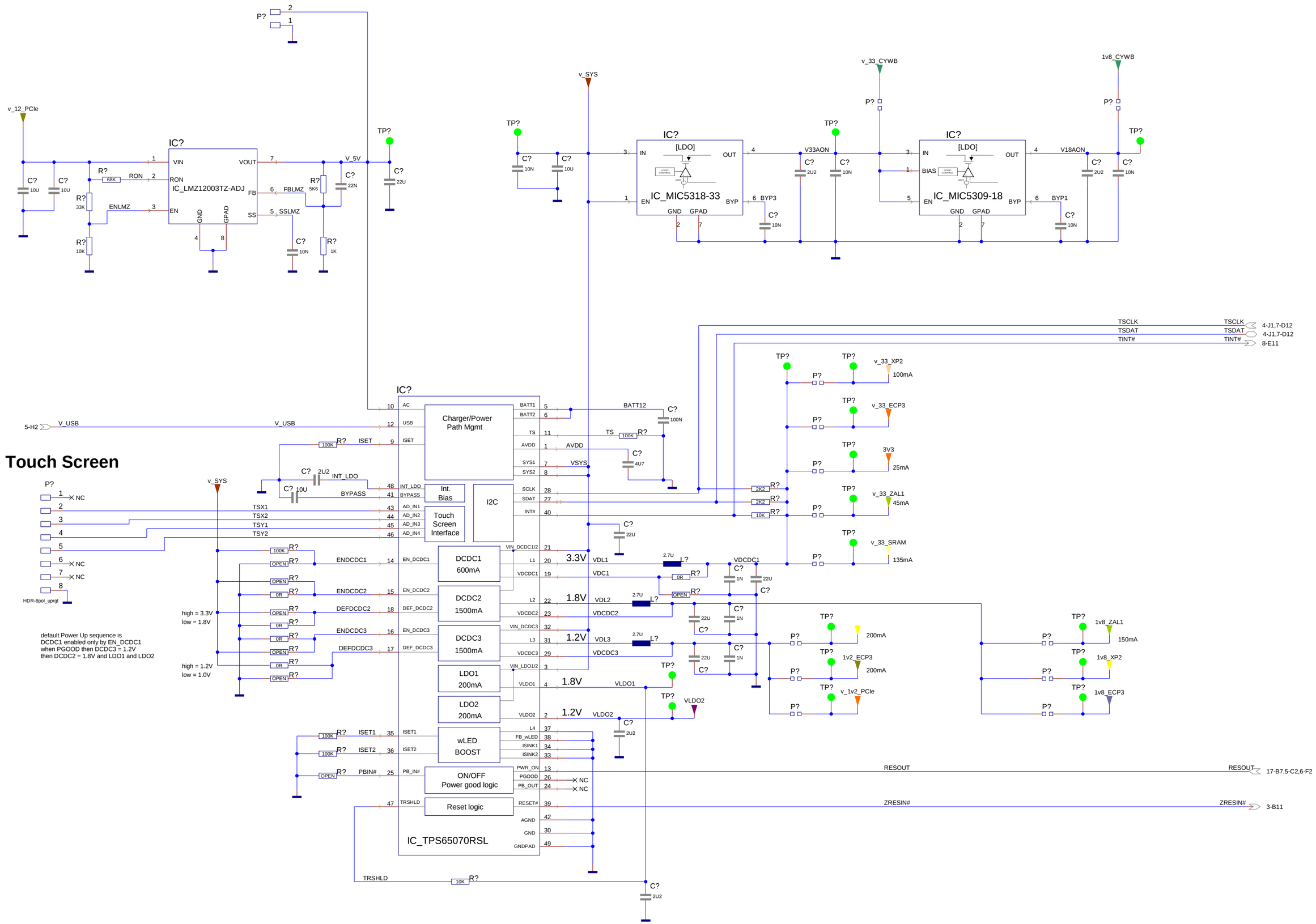
Touch Screen
IC_LMZ12003TZ-ADJ
IC_MIC5318-33
IC_MIC5309-18
IC_TPS65070RSL
Charger/Power Path Mgmt
Int. Bias
Touch Screen Interface
I2C
DCDC1 600mA
DCDC2 1500mA
DCDC3 1500mA
LDO1 200mA
LDO2 200mA
wLED BOOST
ON/OFF Power good logic
Reset logic
HDR-8pol_uprgt
default Power Up sequence is
DCDC1 enabled only by EN_DCDC1
when PGOOD then DCDC3 = 1.2V
then DCDC2 = 1.8V and LDO1 and LDO2
high = 3.3V
low = 1.8V
high = 1.2V
low = 1.0V
v_12_PCIe
v_SYS
v_33_CYWB
1v8_CYWB
V_USB
5-H2
TSCLK
TSDAT
TINT#
4-J1,7-D12
8-E11
RESOUT
17-B7,5-C2,6-F2
ZRESIN#
3-B11
v_33_XP2
100mA
v_33_ECP3
3V3
25mA
v_33_ZAL1
45mA
v_33_SRAM
135mA
200mA
1v2_ECP3
v_1v2_PCIe
1v8_ZAL1
150mA
1v8_XP2
1v8_ECP3