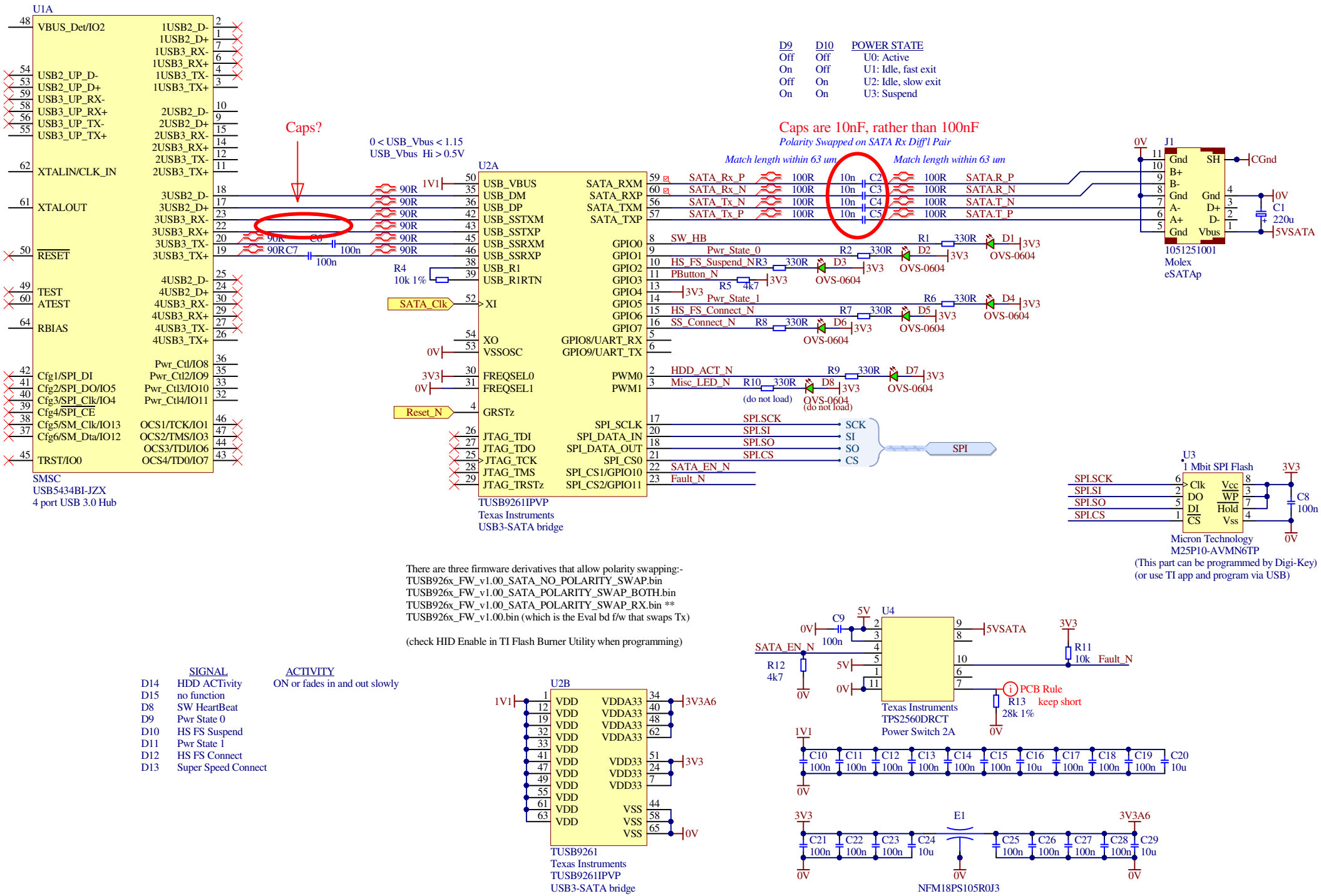
U1A
VBUS_Det/IO2
1USB2_D-
1USB2_D+
1USB3_RX-
1USB3_RX+
USB2_UP_D-
USB2_UP_D+
USB3_UP_RX-
USB3_UP_RX+
USB3_UP_TX-
USB3_UP_TX+
1USB3_TX-
1USB3_TX+
2USB2_D-
2USB2_D+
2USB3_RX-
2USB3_RX+
2USB3_TX-
2USB3_TX+
XTALIN/CLK_IN
XTALOUT
3USB2_D-
3USB2_D+
3USB3_RX-
3USB3_RX+
3USB3_TX-
3USB3_TX+
RESET
4USB2_D-
4USB2_D+
4USB3_RX-
4USB3_RX+
4USB3_TX-
4USB3_TX+
TEST
ATEST
RBIAS
Pwr_Ctl/IO8
Pwr_Ctl2/IO9
Pwr_Ctl3/IO10
Pwr_Ctl4/IO11
Cfg1/SPI_DI
Cfg2/SPI_DO/IO5
Cfg3/SPI_Clk/IO4
Cfg4/SPI_CE
Cfg5/SM_Clk/IO13
Cfg6/SM_Dta/IO12
OCS1/TCK/IO1
OCS2/TMS/IO3
OCS3/TDI/IO6
OCS4/TD0/IO7
TRST/IO0
SMSC
USB5434BI-JZX
4 port USB 3.0 Hub
Caps?
0 < USB_Vbus < 1.15
USB_Vbus Hi > 0.5V
90R
C6
100n
90R
C7
100n
R4
10k 1%
1V1
SATA_Clk
Reset_N
0V
3V3
U2A
USB_VBUS
USB_DM
USB_DP
USB_SSTXM
USB_SSTXP
USB_SSRXM
USB_SSRXP
USB_R1
USB_R1RTN
XI
XO
VSSOSC
FREQSEL0
FREQSEL1
GRSTz
JTAG_TDI
JTAG_TDO
JTAG_TCK
JTAG_TMS
JTAG_TRSTz
SATA_RXM
SATA_RXP
SATA_TXM
SATA_TXP
GPIO0
GPIO1
GPIO2
GPIO3
GPIO4
GPIO5
GPIO6
GPIO7
GPIO8/UART_RX
GPIO9/UART_TX
PWM0
PWM1
SPI_SCLK
SPI_DATA_IN
SPI_DATA_OUT
SPI_CS0
SPI_CS1/GPIO10
SPI_CS2/GPIO11
TUSB9261IPVP
Texas Instruments
USB3-SATA bridge
D9 D10 POWER STATE
Off Off U0: Active
On Off U1: Idle, fast exit
Off On U2: Idle, slow exit
On On U3: Suspend
Caps are 10nF, rather than 100nF
Polarity Swapped on SATA Rx Diff'l Pair
Match length within 63 um
Match length within 63 um
SATA_Rx_P
SATA_Rx_N
SATA_Tx_N
SATA_Tx_P
100R
10n
C2
C3
C4
C5
SATA.R_P
SATA.R_N
SATA.T_N
SATA.T_P
SW_HB
Pwr_State_0
HS_FS_Suspend_N
PButton_N
Pwr_State_1
HS_FS_Connect_N
SS_Connect_N
HDD_ACT_N
Misc_LED_N
R1 330R D1 3V3 OVS-0604
R2 330R D2 3V3 OVS-0604
R3 330R D3 3V3 OVS-0604
R5 4k7 3V3
R6 330R D4 3V3 OVS-0604
R7 330R D5 3V3 OVS-0604
R8 330R D6 3V3 OVS-0604
R9 330R D7 3V3 OVS-0604
R10 330R D8 3V3 OVS-0604
(do not load)
(do not load)
SPI.SCK
SPI.SI
SPI.SO
SPI.CS
SCK
SI
SO
CS
SPI
SATA_EN_N
Fault_N
J1
Gnd
B+
B-
Gnd
A-
A+
Gnd
SH
Gnd
D+
D-
Vbus
CGnd
0V
C1
220u
5VSATA
1051251001
Molex
eSATAp
U3
1 Mbit SPI Flash
Clk
DO
DI
CS
Vcc
WP
Hold
Vss
C8
100n
Micron Technology
M25P10-AVMN6TP
(This part can be programmed by Digi-Key)
(or use TI app and program via USB)
There are three firmware derivatives that allow polarity swapping:-
TUSB926x_FW_v1.00_SATA_NO_POLARITY_SWAP.bin
TUSB926x_FW_v1.00_SATA_POLARITY_SWAP_BOTH.bin
TUSB926x_FW_v1.00_SATA_POLARITY_SWAP_RX.bin **
TUSB926x_FW_v1.00.bin (which is the Eval bd f/w that swaps Tx)
(check HID Enable in TI Flash Burner Utility when programming)
SIGNAL ACTIVITY
D14 HDD ACTivity ON or fades in and out slowly
D15 no function
D8 SW HeartBeat
D9 Pwr State 0
D10 HS FS Suspend
D11 Pwr State 1
D12 HS FS Connect
D13 Super Speed Connect
U2B
VDD
VDDA33
VDD33
VSS
3V3A6
3V3
TUSB9261
Texas Instruments
TUSB9261IPVP
USB3-SATA bridge
U4
C9
100n
5V
SATA_EN_N
R12
4k7
5VSATA
R11
10k
Fault_N
PCB Rule
keep short
R13
28k 1%
Texas Instruments
TPS2560DRCT
Power Switch 2A
C10 C11 C12 C13 C14 C15 C16 C17 C18 C19 C20
100n 100n 100n 100n 100n 100n 10u 100n 100n 100n 10u
C21 C22 C23 C24 C25 C26 C27 C28 C29
100n 100n 100n 10u 100n 100n 100n 100n 10u
E1
NFM18PS105R0J3