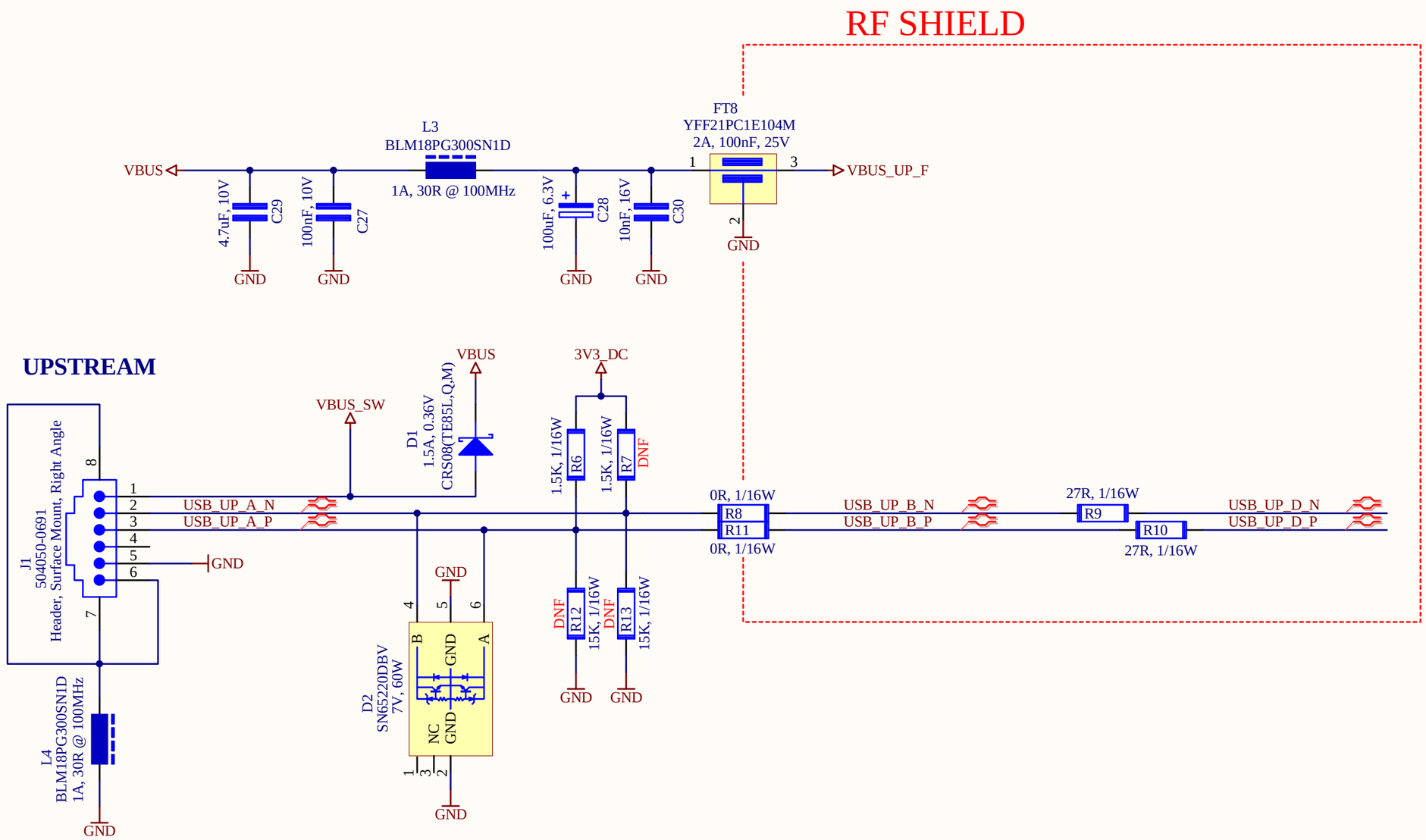
RF SHIELD
UPSTREAM
VBUS
L3
BLM18PG300SN1D
1A, 30R @ 100MHz
FT8
YFF21PC1E104M
2A, 100nF, 25V
VBUS_UP_F
4.7uF, 10V
C29
100nF, 10V
C27
100uF, 6.3V
C28
10nF, 16V
C30
GND
VBUS_SW
D1
1.5A, 0.36V
CRS08(TE85L,Q,M)
3V3_DC
1.5K, 1/16W
R6
R7
DNF
J1
504050-0691
Header, Surface Mount, Right Angle
USB_UP_A_N
USB_UP_A_P
0R, 1/16W
R8
R11
USB_UP_B_N
USB_UP_B_P
27R, 1/16W
R9
R10
USB_UP_D_N
USB_UP_D_P
R12
R13
15K, 1/16W
D2
SN65220DBV
7V, 60W
NC
L4
BLM18PG300SN1D
1A, 30R @ 100MHz