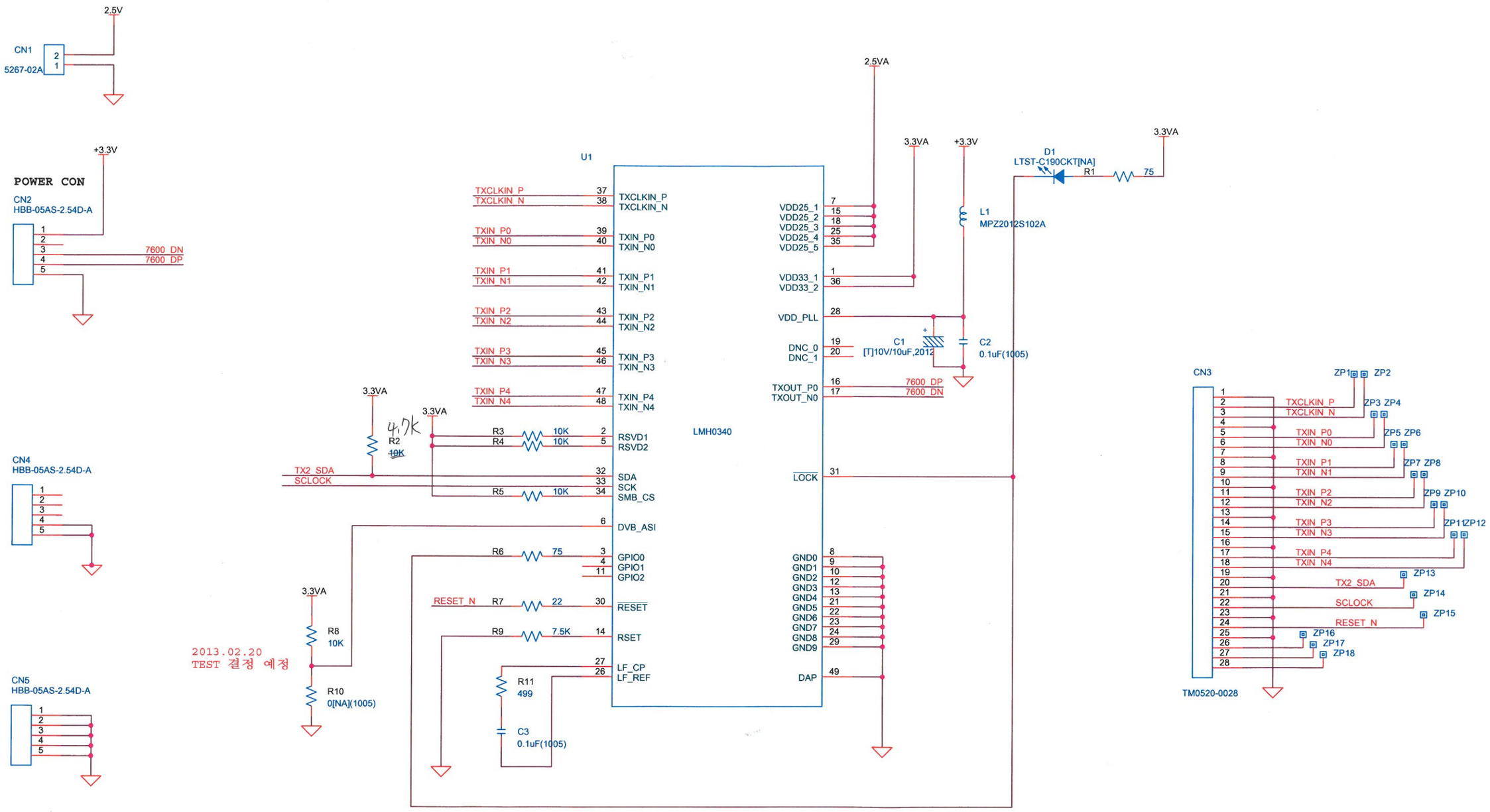

대외비

130219-RD8-XXXX-XXXX	
Title	DPT_SUB_Board
Size A3	Document Number SeeEyes(2013.02.19)
Rev 0.1	
Date: Thursday, February 21, 2013	Sheet 1 of 4