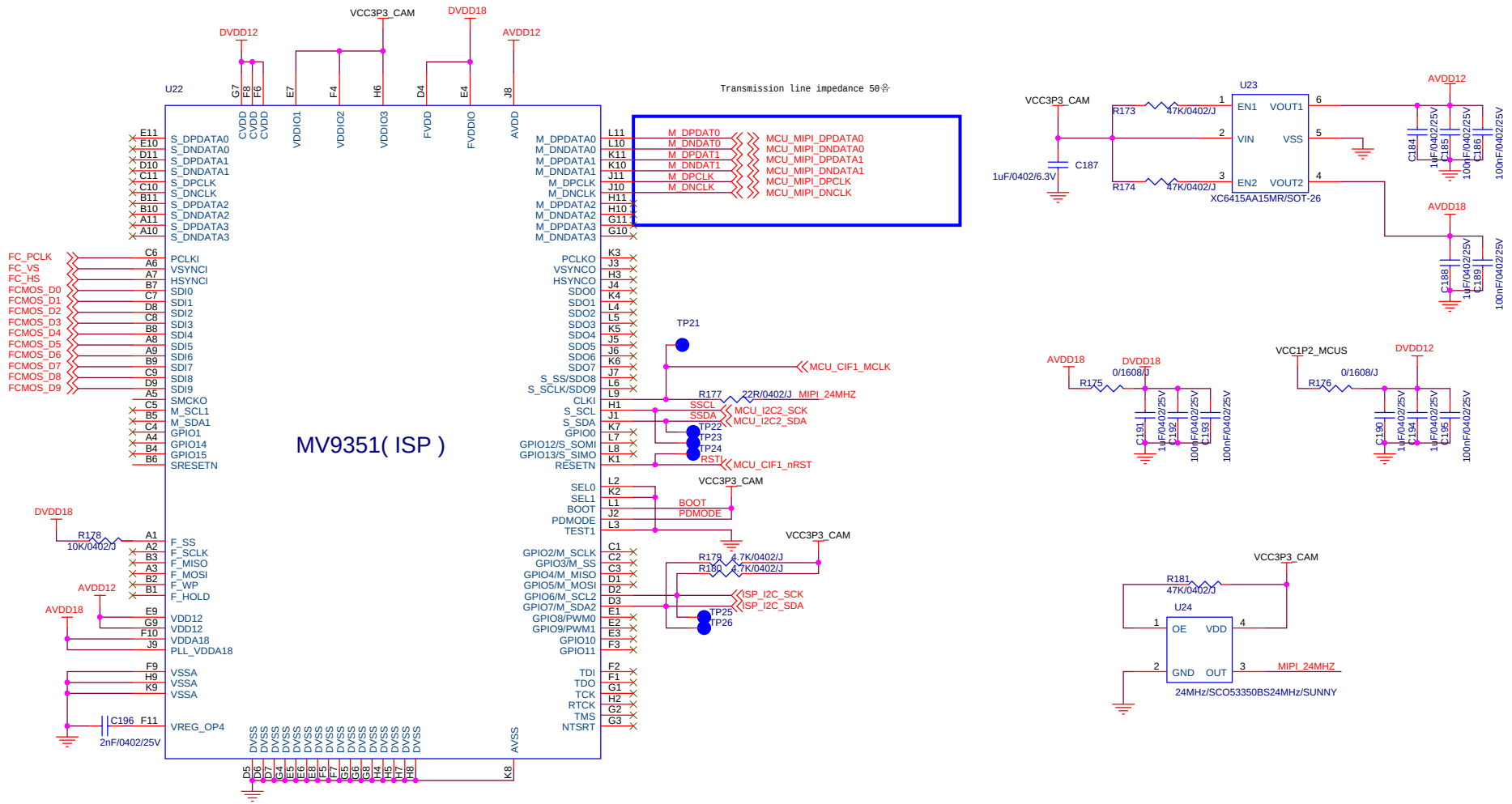

Title	**Module Type BLACK BOX**
Size A3	Document Number <Doc>
Rev	<RevCode>
Date: Thursday, June 26, 2014	Sheet 13 of 13

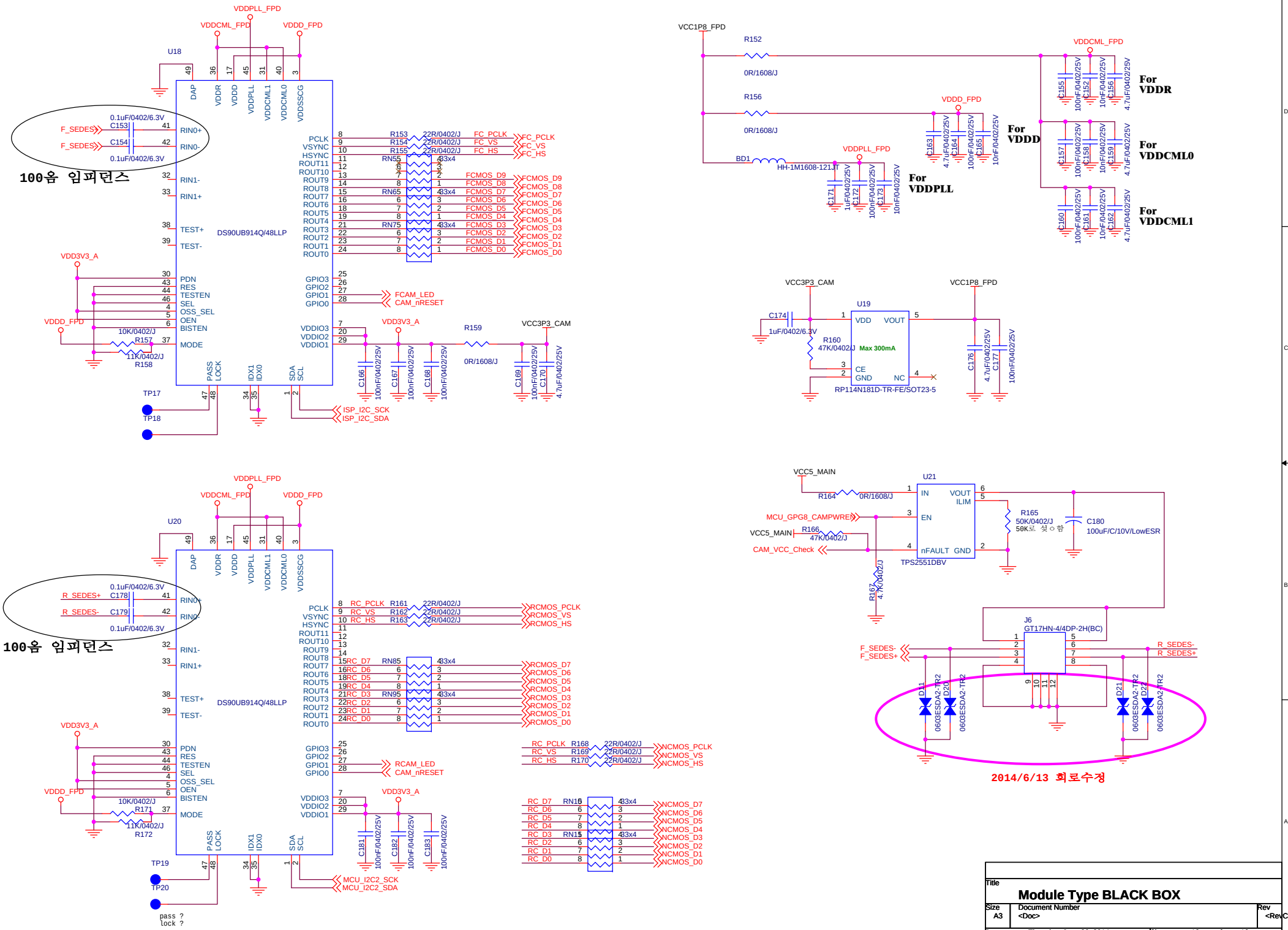
U18
DS90UB914Q/48LLP
VDDPLL_FPD
VDDCML_FPD
VDDD_FPD
VDD3V3_A
VDDD_FPD
F_SEDES
C153
C154
0.1uF/0402/6.3V
RIN0+
RIN0-
RIN1-
RIN1+
TEST+
TEST-
PDN
RES
TESTEN
SEL
OSS_SEL
OEN
BISTEN
MODE
R157
10K/0402/J
R158
11K/0402/J
PASS
LOCK
IDX1
IDX0
SDA
SCL
TP17
TP18
100옴 임피던스
PCLK
VSYNC
HSYNC
ROUT11
ROUT10
ROUT9
ROUT8
ROUT7
ROUT6
ROUT5
ROUT4
ROUT3
ROUT2
ROUT1
ROUT0
GPIO3
GPIO2
GPIO1
GPIO0
VDDIO3
VDDIO2
VDDIO1
R153
R154
R155
22R/0402/J
FC_PCLK
FC_VS
FC_HS
RN55
RN65
RN75
33x4
FCMOS_D9
FCMOS_D8
FCMOS_D7
FCMOS_D6
FCMOS_D5
FCMOS_D4
FCMOS_D3
FCMOS_D2
FCMOS_D1
FCMOS_D0
FCAM_LED
CAM_nRESET
R159
0R/1608/J
VCC3P3_CAM
C166
C167
C168
C169
C170
100nF/0402/25V
4.7uF/0402/25V
ISP_I2C_SCK
ISP_I2C_SDA
VCC1P8_FPD
R152
R156
0R/1608/J
BD1
HH-1M1608-121JT
C171
C172
C173
1uF/0402/25V
10nF/0402/25V
For VDDPLL
C183
C164
C165
For VDDD
C155
C152
C156
For VDDR
C157
C158
C159
For VDDCML0
C160
C161
C162
For VDDCML1
VCC3P3_CAM
U19
C174
1uF/0402/6.3V
R160
47K/0402/J
Max 300mA
VDD
VOUT
CE
GND
NC
RP114N181D-TR-FE/SOT23-5
VCC1P8_FPD
C176
C177
4.7uF/0402/25V
100nF/0402/25V
U20
DS90UB914Q/48LLP
R_SEDES+
R_SEDES-
C178
C179
RC_PCLK
RC_VS
RC_HS
R161
R162
R163
RCMOS_PCLK
RCMOS_VS
RCMOS_HS
RN85
RN95
RCMOS_D7
RCMOS_D6
RCMOS_D5
RCMOS_D4
RCMOS_D3
RCMOS_D2
RCMOS_D1
RCMOS_D0
R168
R169
R170
NCMOS_PCLK
NCMOS_VS
NCMOS_HS
RN105
RN115
NCMOS_D7
NCMOS_D6
NCMOS_D5
NCMOS_D4
NCMOS_D3
NCMOS_D2
NCMOS_D1
NCMOS_D0
RCAM_LED
CAM_nRESET
R171
R172
C181
C182
C183
MCU_I2C2_SCK
MCU_I2C2_SDA
TP19
TP20
pass ?
lock ?
VCC5_MAIN
R164
0R/1608/J
U21
IN
VOUT
ILIM
EN
nFAULT
GND
TPS2551DBV
MCU_GPG8_CAMPWREN
R166
47K/0402/J
CAM_VCC_Check
R167
4.7K/0402/J
R165
50K/0402/J
50K로 것이함
C180
100uF/C/10V/LowESR
J6
GT17HN-4/4DP-2H(BC)
F_SEDES-
F_SEDES+
R_SEDES-
R_SEDES+
D11
D20
D21
D22
0603ESDA2-TR2
2014/6/13 회로수정
Title
Module Type BLACK BOX
Size
A3
Document Number
<Doc>
Rev
<RevCode>
Date:
Thursday, June 26, 2014
Sheet
12
of
13