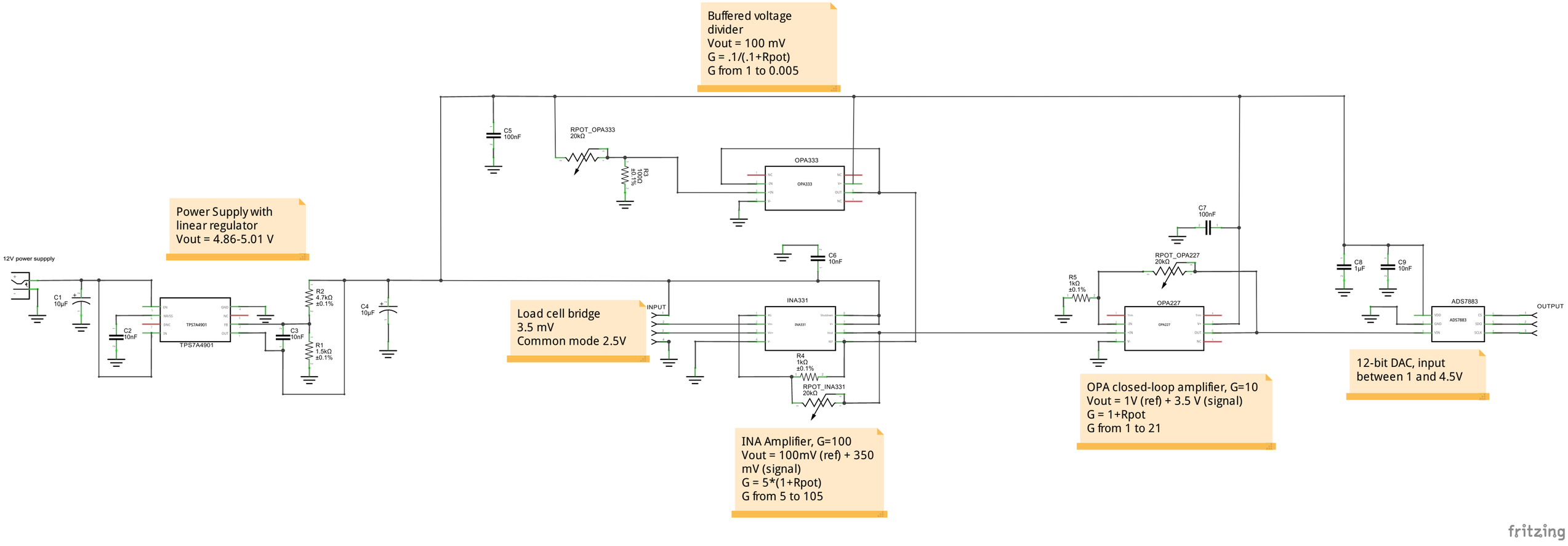
Buffered voltage divider
Vout = 100 mV
G = .1/(.1+Rpot)
G from 1 to 0.005
Power Supply with linear regulator
Vout = 4.86-5.01 V
12V power suppply
C1 10µF
C2 10nF
TPS7A4901
C3 10nF
R2 4.7kΩ ±0.1%
R1 1.5kΩ ±0.1%
C4 10µF
C5 100nF
RPOT_OPA333 20kΩ
R3 100Ω ±0.1%
OPA333
C6 10nF
Load cell bridge
3.5 mV
Common mode 2.5V
INPUT
INA331
R4 1kΩ ±0.1%
RPOT_INA331 20kΩ
INA Amplifier, G=100
Vout = 100mV (ref) + 350 mV (signal)
G = 5*(1+Rpot)
G from 5 to 105
C7 100nF
RPOT_OPA227 20kΩ
R5 1kΩ ±0.1%
OPA227
OPA closed-loop amplifier, G=10
Vout = 1V (ref) + 3.5 V (signal)
G = 1+Rpot
G from 1 to 21
C8 1µF
C9 10nF
ADS7883
OUTPUT
12-bit DAC, input between 1 and 4.5V
fritzing