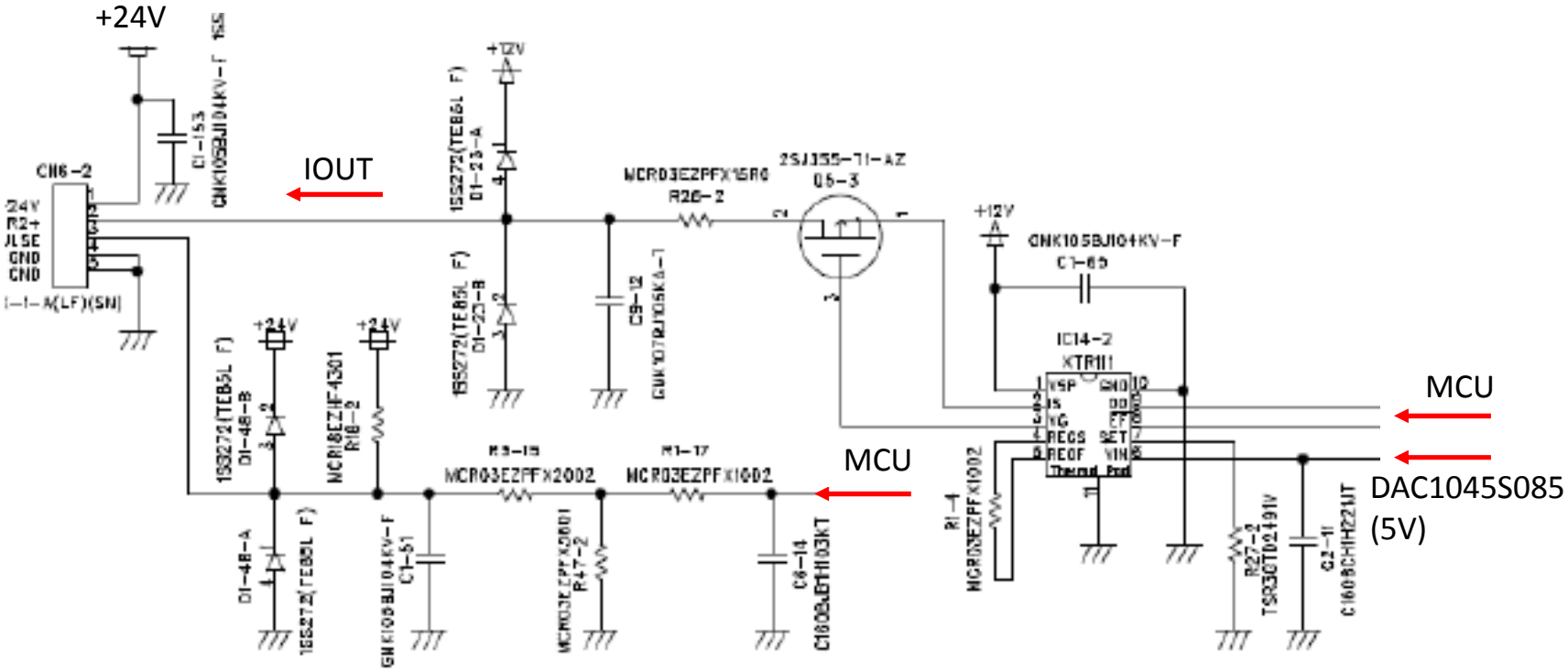
+24V
IOUT
MCU
MCU
DAC1045S085
(5V)
CN6-2
24V
R2+
JLSE
GND
GND
+12V
+24V
+24V
+12V
2SJ355-TI-AZ
Q5-3
IC14-2
XTR111
VSP
GND
VS
VG
REGS
SET
REGF
VIN
Thermal Pad
MCR03EZPFX1500
R26-2
MCR03EZPFX2002
MCR03EZPFX1002
MCR18EZHF4301
R18-2
GNK105BJ104KV-F
C7-65
C9-12
C1-51
C6-14
C1608CH1H103KT
R27-2
TSR3DT02491V
C2-11
C1608CH1H221JT
R1-4
MCR03EZPFX1002
D1-48-A
D1-48-B
D1-23-A
D1-23-B
1SS272(TE85L F)