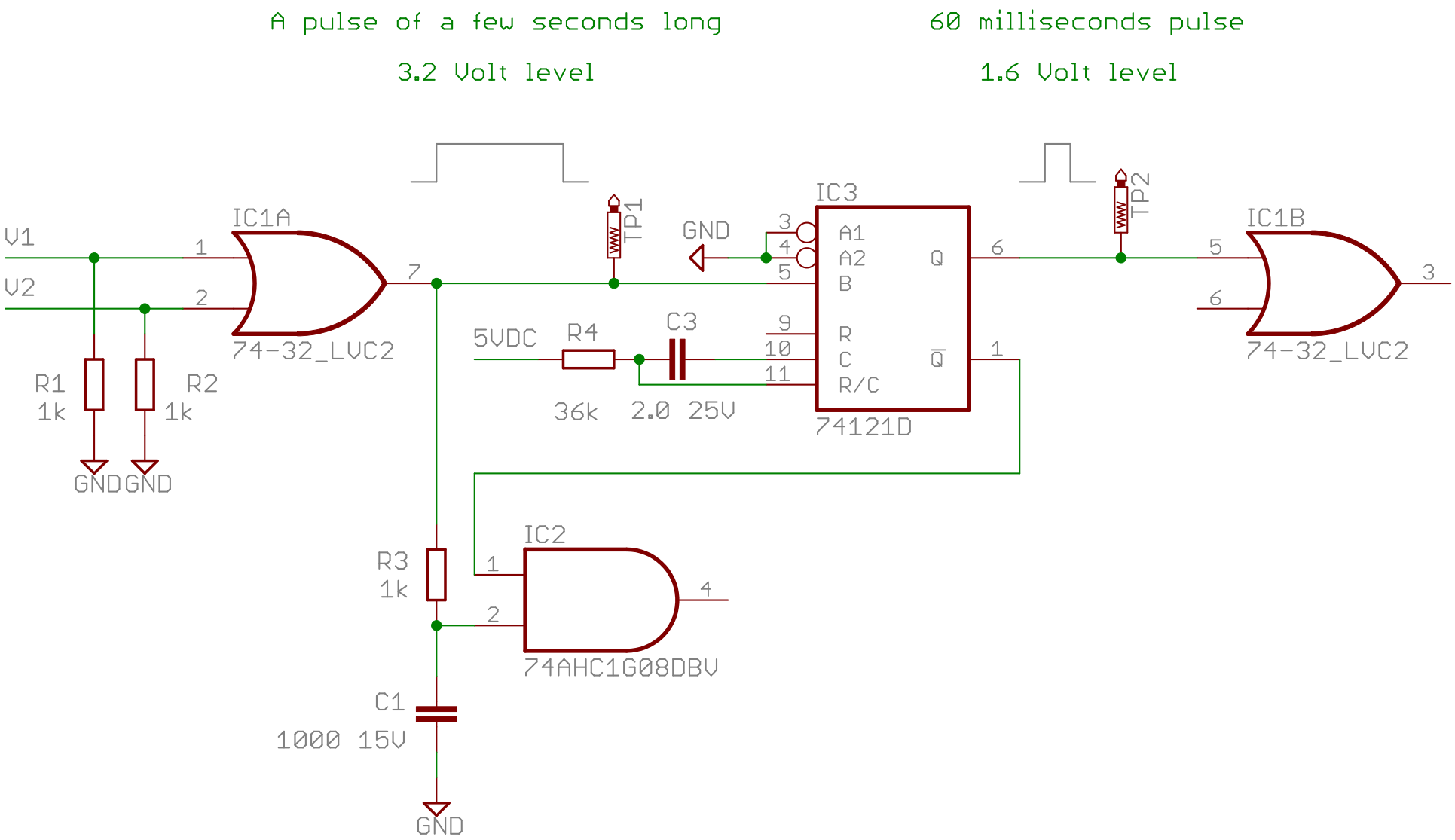
A pulse of a few seconds long
3.2 Volt level
60 milliseconds pulse
1.6 Volt level
V1
V2
IC1A
74-32_LVC2
R1
1k
R2
1k
GND
GND
TP1
GND
IC3
A1
A2
B
R
C
R/C
Q
Q̄
74121D
5VDC
R4
36k
C3
2.0 25V
TP2
IC1B
74-32_LVC2
R3
1k
IC2
74AHC1G08DBV
C1
1000 15V
GND