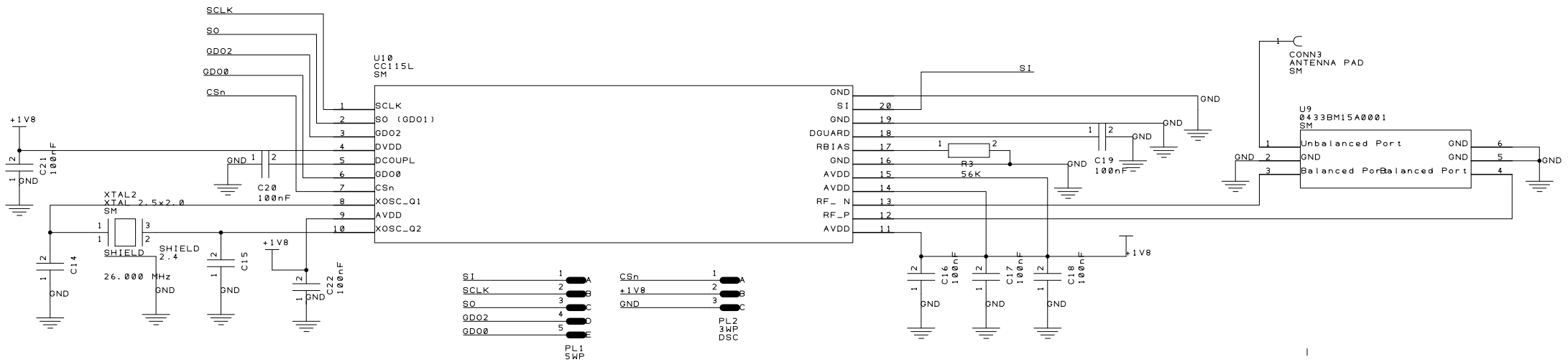
SCLK
SO
GDO2
GDO0
CSn
U10
CC115L
SM
1 SCLK
2 SO (GDO1)
3 GDO2
4 DVDD
5 DCOUPL
6 GDO0
7 CSn
8 XOSC_Q1
9 AVDD
10 XOSC_Q2
GND 20
SI 19
GND 18
DGUARD 17
RBIAS 16
GND 15
AVDD 14
AVDD 13
RF_ N 12
RF_P 11
AVDD
SI
GND
+1V8
C21
100nF
GND
C20
100nF
XTAL2
XTAL 2.5x2.0
SM
SHIELD
SHIELD
2.4
26.000 MHz
C14
C15
C22
100nF
R3
56K
C19
100nF
C16
100nF
C17
100nF
C18
100nF
CONN3
ANTENNA PAD
SM
U9
0433BM15A0001
SM
Unbalanced Port
Balanced Port
Balanced Port
SI
SCLK
SO
GDO2
GDO0
PL1
5WP
CSn
+1V8
GND
PL2
3WP
DSC