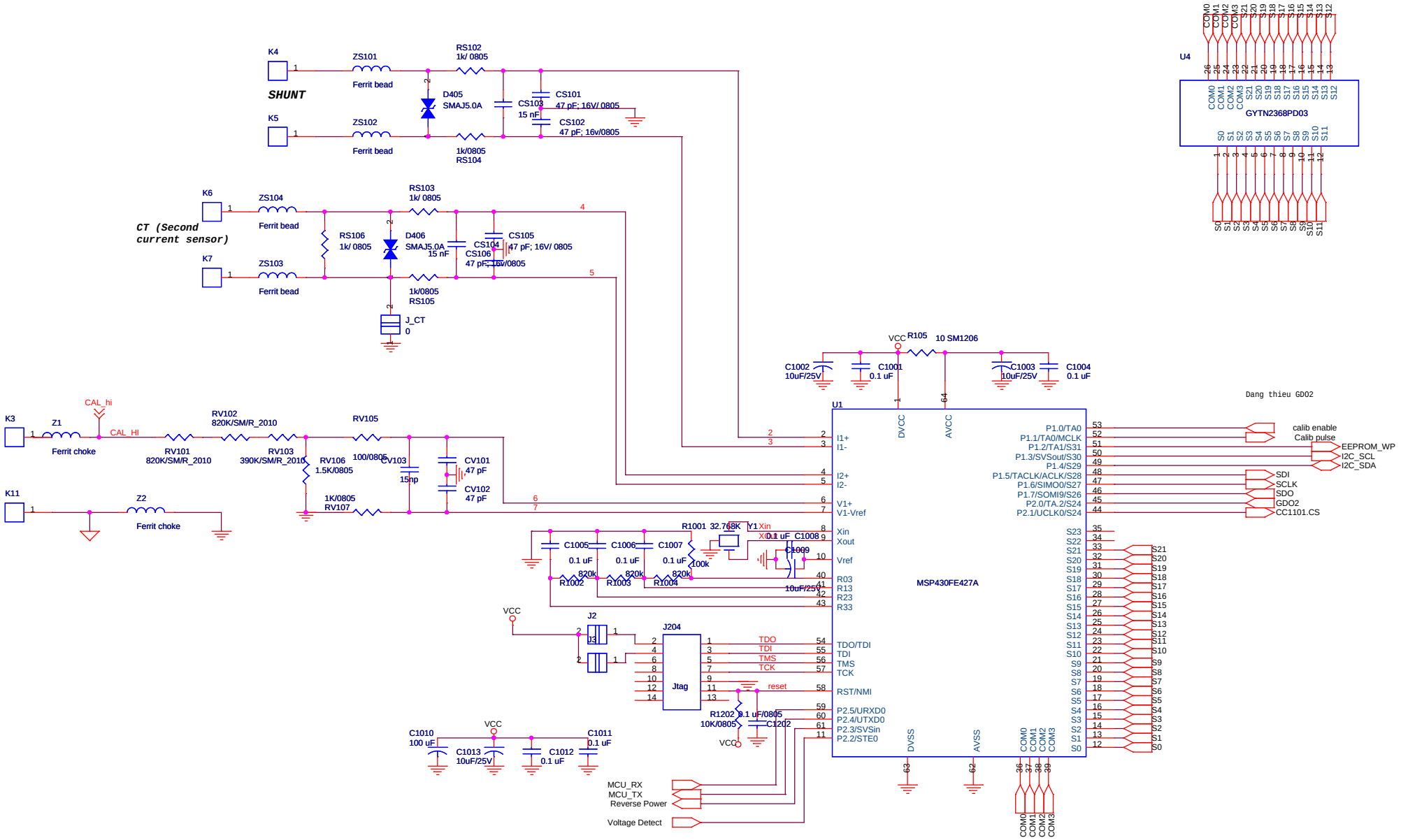

Title	<Title>	
Size A3	Document Number <Doc>	Rev <RevCode>
Date: Thursday, March 08, 2012	Sheet 1 of 1	