First Edition
Feb 1, 2005

LCD Module Technical Specification

Final Revision
******

Type No. **F-51933GNF-SLW-ACN**

Approved by (Quality Assurance Division)

Checked by (ACI Engineering Division)

T.Yuchi
Prepared by (ACI Engineering Division)

Table of Contents

Revision History

Rev.	Date	Page	Comment

1.General Specifications

Operating Temp.	:	min. 0°C ~max. 50°C
Storage Temp.	:	min. -20°C ~max. 70°C
Dot Pixels	:	138 (W) × 110 (H) dots
Dot Size	:	0.21 (W) × 0.21 (H) mm
Dot Pitch	:	0.22 (W) × 0.22 (H) mm
Viewing Area	:	34.45 (W) × 26.79 (H) mm
Outline Dimensions	:	41.2 (W) × 37.37* (H) × 2.7** (D) mm * Without Flat Cable ** Without GASKET and Hook
Weight	:	6.8g max.
LCD Type	:	NSD-23074 (F-STN / Black&White-mode / Transflective)
Viewing Angle	:	6:00
Data Transfer	:	Serial data transfer
Backlight	:	LED Backlight / White
Drawings	:	Dimensional Outline UE-312861 Circuit Diagram UE-312738
Lead free	:	Our product corresponds to lead free. Lead free is defined as below: The solder used in the LCD module. Electrical components (Terminal section) used in the LCD module. Any lead used within the electrical component does not apply to our module definition of lead free.

2.Electrical Specifications

2.1.Absolute Maximum Ratings

V_{SS} =0V

Parameter	Symbol	Conditions	Min.	Max.	Units
Supply Voltage (Logic)	V_{CC}- V_{SS}	Note.1	-0.3	4.6	V
Input Voltage	V_I		-0.3	V_{CC}+0.3	V

Note.1: V_{CC}>GND must be maintained.

2.2.DC Characteristics

Ta=25°C, V_{CC}=2.7~3.3V

Parameter	Symbol	Conditions	Min.	Typ.	Max.	Units
Supply Voltage (Logic)	V_{CC}- V_{SS}	-	2.7	-	3.3	V
Supply Voltage (LCD Drive)	V_{1OUT}- V_{SS}	Shown in 3.1				V
High Level Input Voltage	V_{IH}	-	0.7×V_{CC}	-	V_{CC}	V
Low Level Input Voltage	V_{IL}	V_{CC}=2.7~3.3V	-0.3	-	0.15×V_{CC}	V
High Level Output Voltage	V_{OH1}	I_{OH}=-0.1mA	0.75×V_{CC}	-	-	V
Low Level Output Voltage	V_{OL1}	V_{CC}=2.7~3.3V I_{OL}=0.1mA	-	-	0.15×V_{CC}	V
Supply Current	I_{CC}	V_{CC}- V_{SS} =3.0V f_{OSC}=70kHz	-	1.4	2.1	mA

2.3. AC Characteristics

2.3.1. Timing Characteristics

Clock-synchronized Serial Interface Timing Characteristics

V_{CC}=2.7~3.3V

Parameter		Symbol	Conditions	Min.	Max.	Units
Serial Clock Cycle Time	Write	t_{SCYC}	Fig.3	100	2000	ns
	Read	t_{SCH}	Fig.3	250	2000	ns
Serial Clock High-level Width	Write	t_{SCH}	Fig.3	40	-	ns
	Read	t_{SCL}	Fig.3	120	-	ns
Serial Clock Low-level Width	Write	t_{SCL}	Fig.3	40	-	ns
	Read	PW_{LR}	Fig.3	120	-	ns
Serial Clock Rise/Fall Time		t_{SCr},t_{Cf}	Fig.3	-	20	ns
Chip-select Setup Time		t_{CSU}	Fig.3	20	-	ns
Chip-select Hold Time		t_{CH}	Fig.3	60	-	ns
Serial Input Data Setup Time		t_{SISU}	Fig.3	30	-	ns
Serial Input Data Hold Time		t_{SIH}	Fig.3	30	-	ns
Serial Output Data Delay Time		t_{SOD}	Fig.3	-	200	ns
Serial Output Data Hold Time		t_{SOH}	Fig.3	5	-	ns

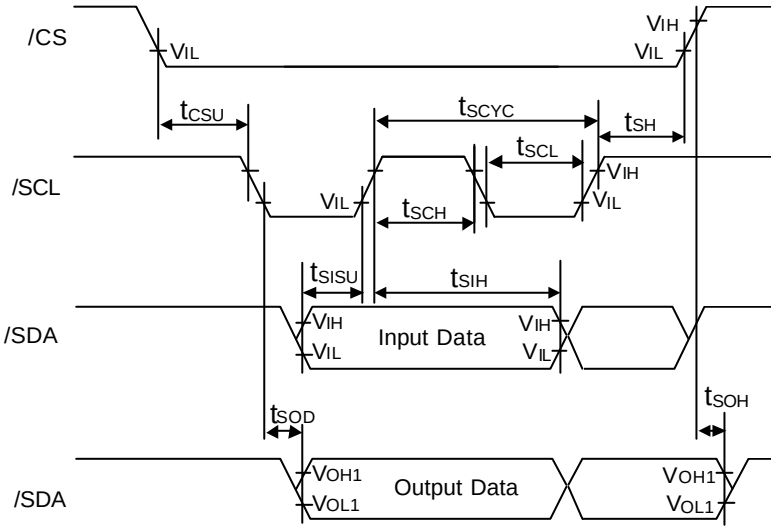

Fig 3. Serial Interface Timing

2.3.2. Reset Timing Characteristics

V_{CC}=2.7~3.3V

Parameter	Symbol	Min.	Max.	Units
Reset Low Level Width	t_{RES}	1	-	ms

2.4. Lighting Specifications

2.4.1. Absolute Maximum Ratings (3 chip)

Ta=25°C

Parameter	Symbol	Conditions	Min.	Typ.	Max.	Units
Foward Current	I_F	-	-	-	30	mA
Reverse Voltage	V_R	-	-	-	10.0	V
LED Power Dissipation	P_D	-	-	-	240	mW

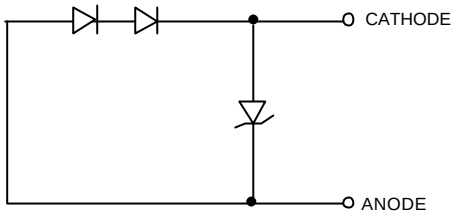

2.4.2. Operating Characteristics

(Only LED) Ta=25°C

Parameter	Symbol	Conditions	Min.	Typ.	Max.	Units
Foward Current Note.1	I_F	V_F=10.0V	-	15	-	mA

Note.1: Backlight(Center)

(MDL) Ta=25°C

Parameter	Symbol	Conditions	Min.	Typ.	Max.	Units
Luminance of Module Surface	L	I_F=15mA Note.2	70	90	-	cd/m^2

Note.2: Active Area Center

2.4.3. Color tone range

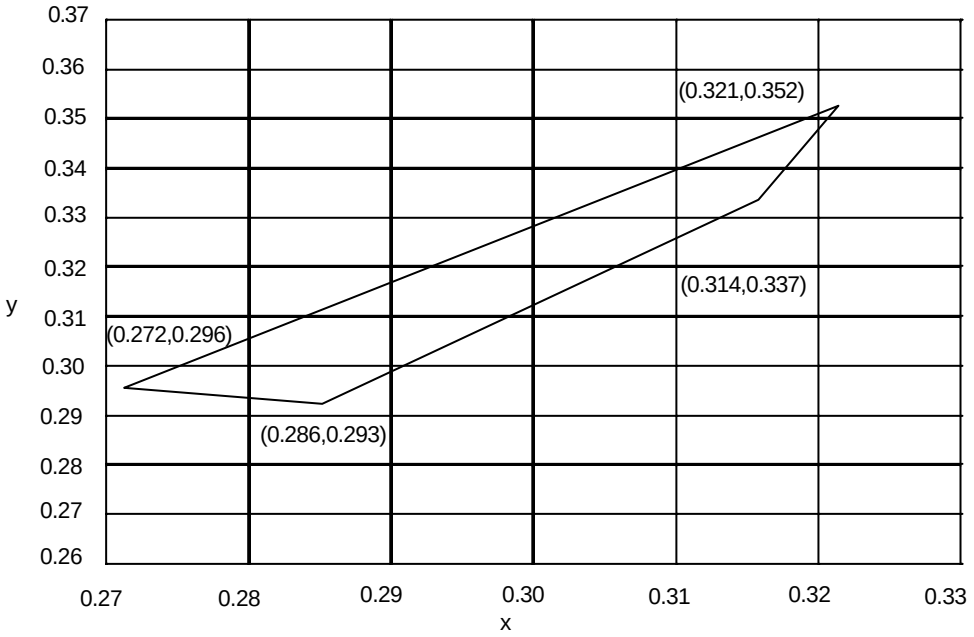

3.Optical Specifications

3.1. LCD Driving Voltage

Parameter	Symbol	Conditions	Min.	Typ.	Max.	Units
Recommended		Ta= 0°C	11.9	-	-	V
LCD Driving Voltage	V_{1OUT}-GND	Ta=25°C	12.0	12.9	13.8	V
Note 1		Ta=50°C	-	-	13.8	V

Note 1 : Voltage (Applied actual waveform to LCD Module) for the best contrast. The range of minimum and maximum shows tolerance of the operating voltage. The specified contrast ratio and response time are not guaranteed over the entire range.

3.2. Optical Characteristics

Ta=25°C, 1/112Duty, 1/7 Bias, V_{OD}=12.9V (Note 4), θ= 0°, ϕ=285°

Parameter		Symbol	Conditions	Min.	Typ.	Max.	Units
Contrast Ratio Note 1		CR	θ= 0°,ϕ=285°	3.0	5.0	-	
Viewing Angle			Shown in 3.3				
Response	Rise Note 2	T_{ON}	-	-	200	300	ms
Time	Decay Note 3	T_{OFF}	-	-	270	410	ms

Note 1 :Contrast ratio is definded as follows.(CR = L_{OFF} / L_{ON})

L_{ON} : Luminance of the ON segments

L_{OFF} : Luminance of the OFF segments

Measuring Spot : 3.0mmϕ

Note 2 :The time that the luminance level reaches 90% of the saturation level from 0% when ON signal is applied.

Note 3 :The time that the luminance level reaches 10% of the saturation level from 100% when OFF signal is applied.

Note 4 :Definition of Driving Voltage V_{OD}

Assuming that the typical driving waveforms shown below are applied to the LCD Panel at 1/A Duty - 1/B Bias (A: Duty Number, B: Bias Number). Driving voltage V_{OD} is definded as follows.

V_{OD} = (Vth1+Vth2) / 2

Vth1: The voltage V_{O-P} that should provide 70% of the saturation level in the luminance at the segment which the ON signal is applied to.

Vth2: The voltage V_{O-P} that should provide 20% of the saturation level in the luminance at the segment which the OFF signal is applied to.

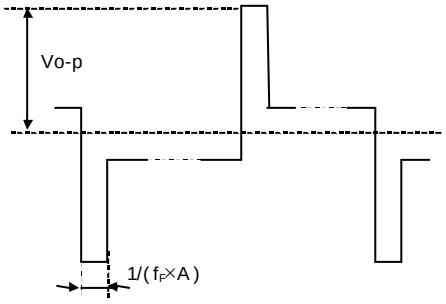

(ON SIGNAL)

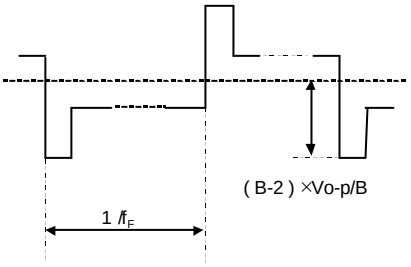

(OFF SIGNAL)

3.3. Definition of Viewing Angle and Optimum Viewing Area

*Point • shows the point where contrast ratio is measured. : θ= 0°, ϕ=285°
*Driving condition: 1/112 Duty, 1/7 Bias, V_{OD}=12.9V, f_F=80Hz

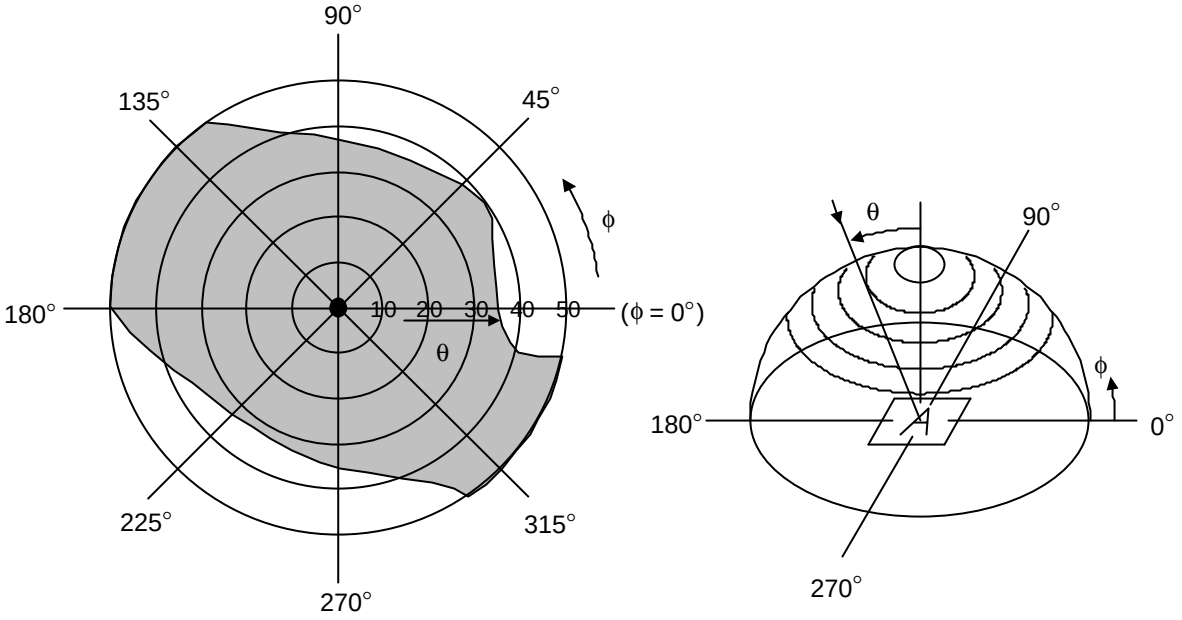

*Area shows typ. CR≥2.0(Measuring Spot : 3mmϕ)

3.4. System Block Diagram

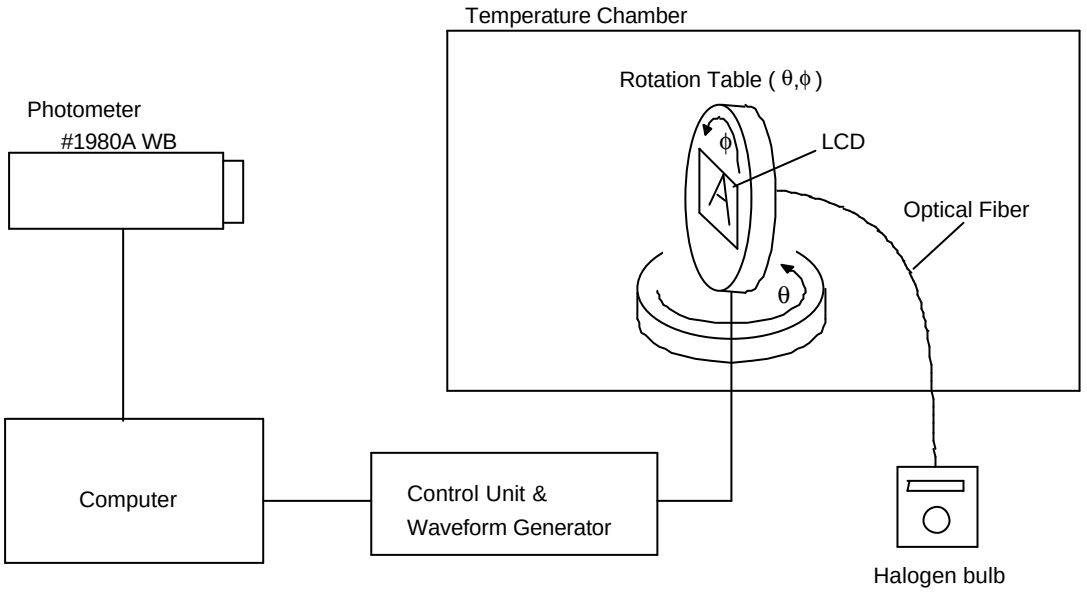

4.I/O Terminal

4.1. Pin Assignment

CN1

No.	Symbol	Function
1	V5OUT	Power Supply for LCD Drive V_5, 1/7,V_1
2	V4OUT	Power Supply for LCD Drive V_4 = 2/7,V_1
3	V3OUT	Power Supply for LCD Drive V_3 = 5/7,V_1
4	V2OUT	Power Supply for LCD Drive V_2 = 6/7,V_1
5	V1OUT	Power Supply for LCD Drive V_1 = VLCD
6	VLREF	LCD Drive Voltage regulator Pin to Capacitor
7	VLOUT	DC/DC Voltage Converter Output
8	C1-	DC/DC Voltage Converter Capacitor 1 Negative
9	C1+	DC/DC Voltage Converter Capacitor 1 Positive
10	C2-	DC/DC Voltage Converter Capacitor 2 Negative
11	C2+	DC/DC Voltage Converter Capacitor 2 Positive
12	C3-	DC/DC Voltage Converter Capacitor 3 Negative
13	C3+	DC/DC Voltage Converter Capacitor 3 Positive
14	C4-	DC/DC Voltage Converter Capacitor 4 Negative
15	C4+	DC/DC Voltage Converter Capacitor 4 Positive
16	C5-	DC/DC Voltage Converter Capacitor 5 Negative
17	C5+	DC/DC Voltage Converter Capacitor 5 Positive
18	C6-	DC/DC Voltage Converter Capacitor 6 Negative
19	C6+	DC/DC Voltage Converter Capacitor 6 Positive
20	VCI	Power Supply for booster
21	VCC	Power Supply for Logic
22	OSC1	Connecting Pin for Oscillation Resistor
23	OSC2	Connecting Pin for Oscillation Resistor
24	VSS	Power Supply (0V, GND)
25	/SDA	Output for Serial Data
26	/SCL	Input for Serial Clock
27	RS / GND	To be Grounded on User's Board
28	/CS	Chip Select Signal L : Active
29	/RESET	Reset Signal L : Reset
30	GNDDUM	LCD Detect Pin
31	LED-K	LED Cathode Terminal
32	LED-A	LED Anode Terminal

4.2. Example of Power Supply

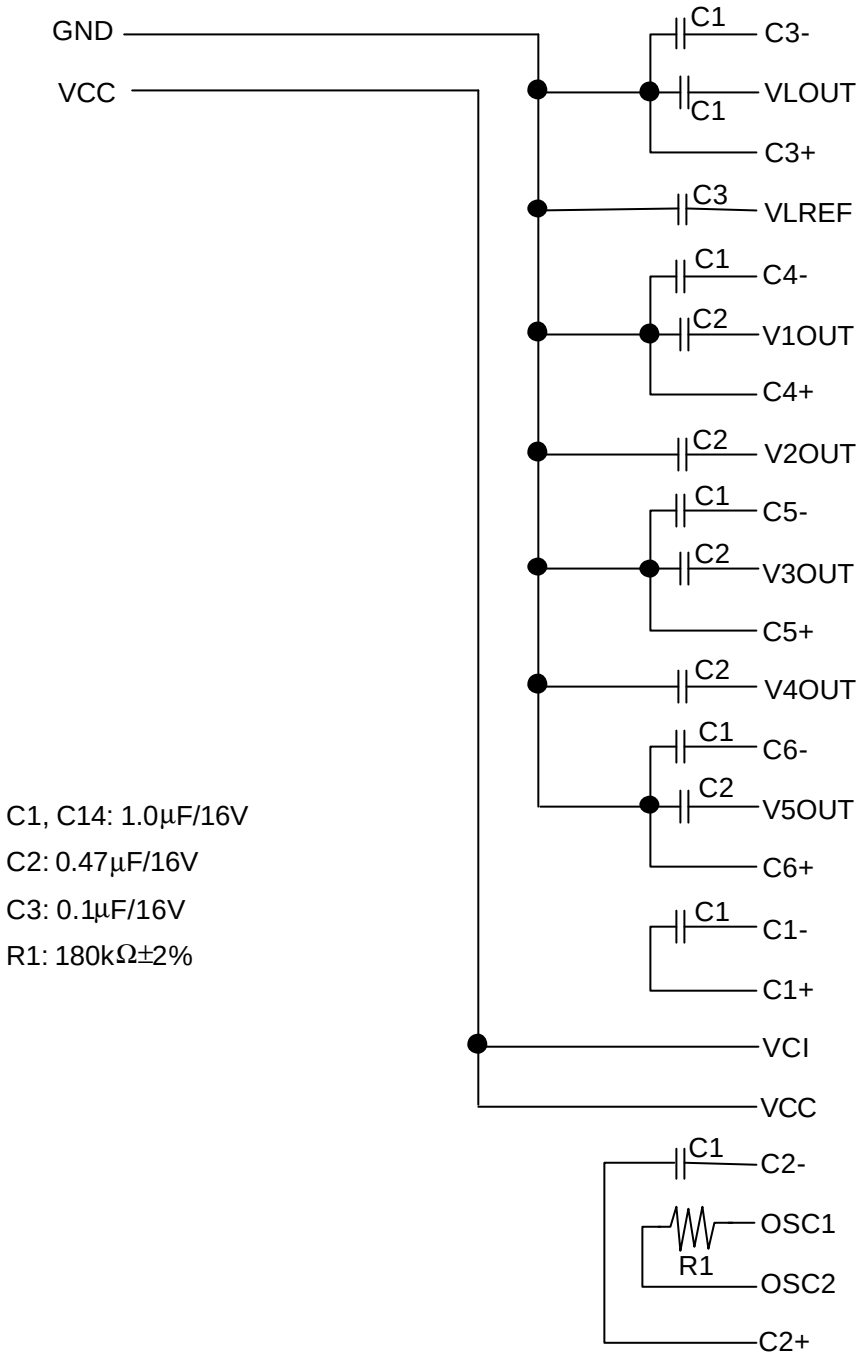

C1, C14: 1.0μF/16V

C2: 0.47μF/16V

C3: 0.1μF/16V

R1: 180kΩ±2%

4.3. Block Diagram

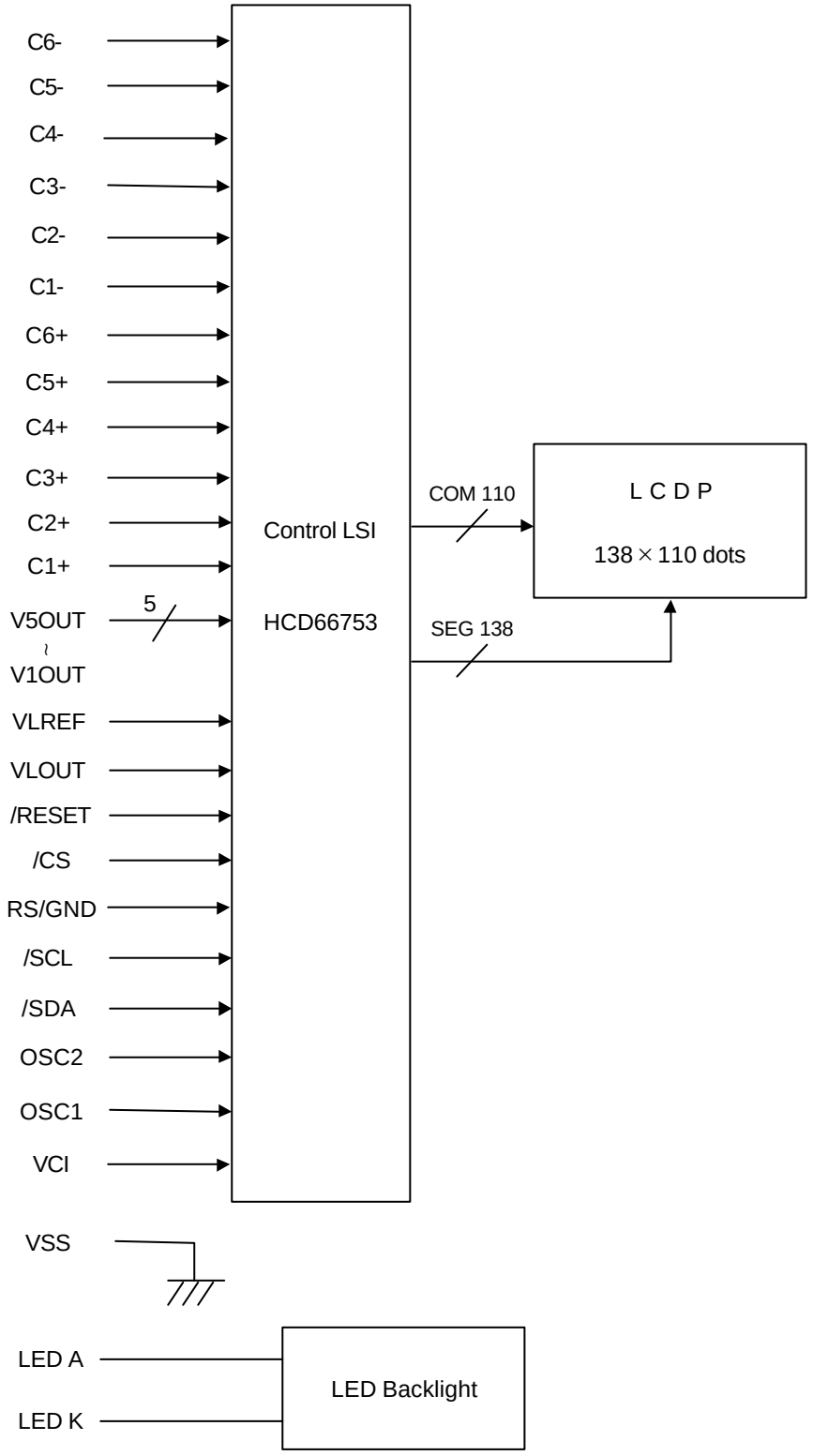

5.Test

No change on display and in operation under the following test condition.

Conditions: Unless otherwise specified, tests will be conducted under the following condition.
Temperature: 20±5°C
Humidity : 65±5%RH
tests will be not conducted under functioning state.

No.	Parameter	Conditions	Notes
1	High Temperature Operating	50°C±2°C, 96hrs (operation state)	
2	Low Temperature Operating	0°C±2°C, 96hrs (operation state)	1
3	High Temperature Storage	70°C±2°C, 96hrs	2
4	Low Temperature Storage	-20°C±2°C, 96hrs	1,2
5	Damp Proof Test	40°C±2°C,90~95%RH, 96hrs	1,2
6	Vibration Test	Total fixed amplitude : 1.5mm Vibration Frequency : 10~55Hz One cycle 60 seconds to 3 directions of X, Y, Z for each 15 minutes	3
7	Shock Test	To be measured after dropping from 60cm high on the concrete surface in packing state. 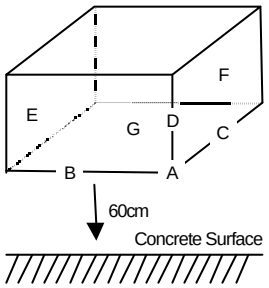 Dropping method corner dropping A corner : once Edge dropping B,C,D edge : once Face dropping E,F,G face : once	

Note 1 :No dew condensation to be observed.
Note 2 :The function test shall be conducted after 4 hours storage at the normal Temperature and humidity after removed from the test chamber.
Note 3 :Vibration test will be conducted to the product itself without putting it in a container.

6.Appearance Standards

6.1.Inspection conditions

The LCD shall be inspected under 40W white fluorescent light.
The distance between the eyes and the sample shall be more than 30cm.
All directions for inspecting the sample should be within 45°against perpendicular line.

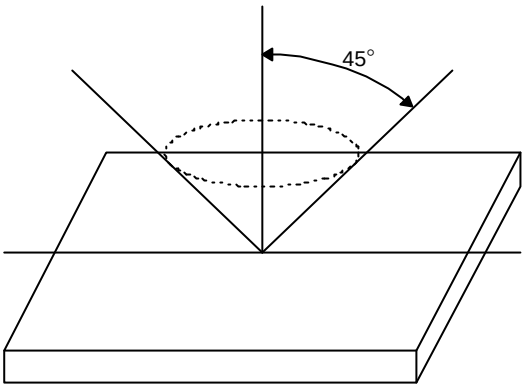

6.2.Definition of applicable Zones

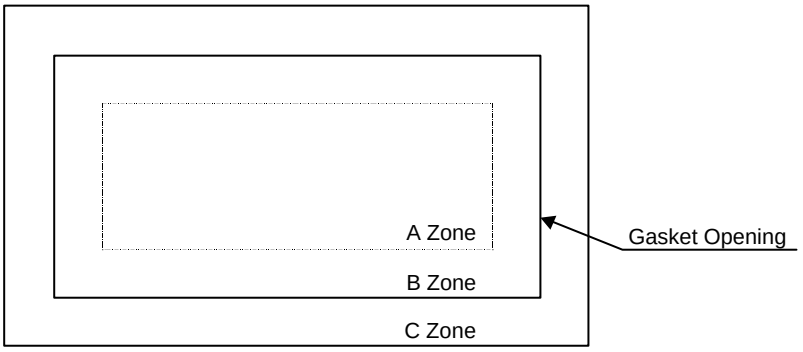

A Zone : Active display area
B Zone : Area from outside of "A Zone" to validity viewing area
C Zone : Rest parts

A Zone + B Zone = Validity viewing area

6.3. Standards

<table>
<tr><th>No.</th><th>Parameter</th><th>Criteria</th></tr>
<tr><td>1</td><td>Black and White Spots, Foreign Substances</td><td>(1) Round Shape
<table>
<tr><th rowspan="2">Zone / Dimension (mm)</th><th colspan="2">Acceptable Number</th></tr>
<tr><th>A+B</th><th>C</th></tr>
<tr><td>D ≤ 0.10</td><td>*</td><td>*</td></tr>
<tr><td>0.10 < D ≤ 0.25</td><td>5</td><td>*</td></tr>
<tr><td>0.25 < D ≤ 0.30</td><td>1</td><td>*</td></tr>
<tr><td>0.30 < D</td><td>0</td><td>*</td></tr>
</table>
D = (Long + Short) / 2 * : Disregard
(2) Line Shape
<table>
<tr><th rowspan="2">Zone
X(mm) / Y(mm)</th><th colspan="2">Acceptable Number</th></tr>
<tr><th>A+B</th><th>C</th></tr>
<tr><td>-</td><td>0.02≥W</td><td>*</td><td>*</td></tr>
<tr><td>2.0≥L</td><td>0.03≥W</td><td>3</td><td>*</td></tr>
<tr><td>1.0≥L</td><td>0.04≥W</td><td>2</td><td>*</td></tr>
<tr><td>1.0<L</td><td>0.04<W</td><td>0</td><td>*</td></tr>
</table>
X : Length Y : Width * : Disregard
Total defects shall not exceed 5.</td></tr>
<tr><td>2</td><td>Air Bubbles (between glass & polarizer)</td><td>
<table>
<tr><th rowspan="2">Zone / Dimension (mm)</th><th colspan="2">Acceptable Number</th></tr>
<tr><th>A+B</th><th>C</th></tr>
<tr><td>D < 0.15</td><td>*</td><td>*</td></tr>
<tr><td>0.15≤ D ≤0.30</td><td>3</td><td>*</td></tr>
<tr><td>0.30 < D ≤0.50</td><td>2</td><td>*</td></tr>
<tr><td>0.50 < D</td><td>0</td><td>*</td></tr>
</table>
* : Disregard
Total defects shall not exceed 3.</td></tr>
<tr><td>3</td><td>Maximim allowable Number of Visual defects</td><td>Total defects shall not exceed 8.</td></tr>
</table>

<table>
<tr><th>No.</th><th>Parameter</th><th>Criteria</th></tr>
<tr><td>4</td><td>The Shape of Dot</td><td>(1) Dot Shape (with Dent)
 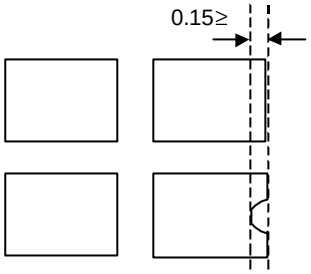

As per the sketch of left hand.
(2) Dot Shape (with Projection)
 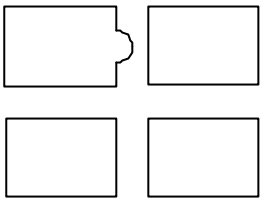
Should not be connected to next dot.
(3) Pin Hole
 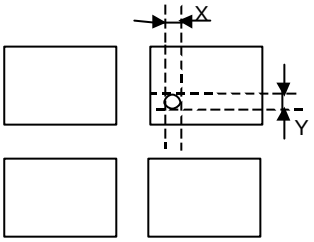

(X+Y) / 2≤0.2mm
(Less than 0.1mm is no counted.)
Total defects shall not exceed 5.</td></tr>
<tr><td>5</td><td>Polarizer Scratches</td><td><table><tr><th rowspan="2">X(mm) \ Y(mm) \ Zone</th><th colspan="2">Acceptable Number</th></tr><tr><th>A+B</th><th>C</th></tr><tr><td>3.0≥L</td><td>0.05≥W</td><td>2</td><td>*</td></tr><tr><td>3.0<L</td><td>0.05<W</td><td>0</td><td>*</td></tr></table></td></tr>
<tr><td>6</td><td>Polarizer Dirts</td><td>If the stains are removed easily from LCDP surface, the module is not not defective.</td></tr>
<tr><td>7</td><td>Color Variation</td><td>Not to be conspicuous defects.</td></tr>
</table>

7.Code System of Production Lot

The production lot of module is specified as follows.

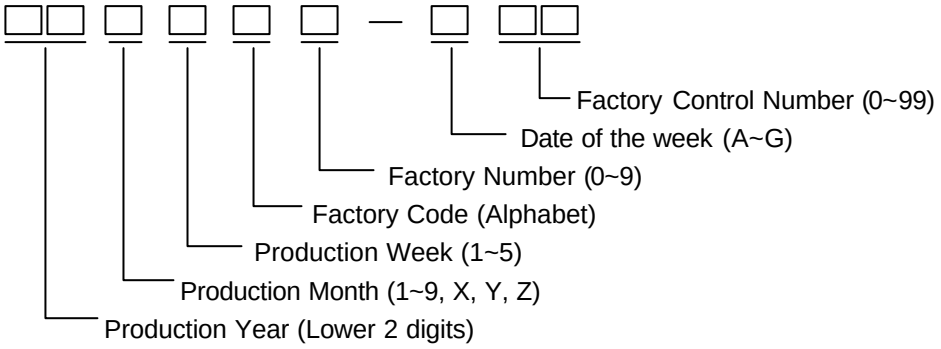

8.Type Number

The type number of module is specified as follows.

F-51933GNF-SLW-ACN

9.Applying Precautions

Please contact us when questions and/or new problems not specified in this Specifications arise.

10.Precautions Relating Product Handling

The Following precautions will guide you in handling our product correctly.

1) Liquid crystal display devices
   1. The liquid crystal display device panel used in the liquid crystal display module is made of plate glass. Avoid any strong mechanical shock. Should the glass break handle it with care.
   2. The polarizer adhering to the surface of the LCD is made of a soft material. Guard against scratching it.

2) Care of the liquid crystal display module against static electricity discharge.
   1. When working with the module, be sure to ground your body and any electrical equipment you may be using. We strongly recommend the use of anti static mats (made of rubber), to protect work tables against the hazards of electrical shock.
   2. Avoid the use of work clothing made of synthetic fibers. We recommend cotton clothing or other conductivity-treated fibers.
   3. Slowly and carefully remove the protective film from the LCD module, since this operation can generate static electricity.

3) When the LCD module alone must be stored for long periods of time:
   1. Protect the modules from high temperature and humidity.
   2. Keep the modules out of direct sunlight or direct exposure to ultraviolet rays.
   3. Protect the modules from excessive external forces.

4) Use the module with a power supply that is equipped with an overcurrent protector circuit,since the module is not provided with this protective feature.

5) Do not ingest the LCD fluid itself should it leak out of a damaged LCD module. Should hands or clothing come in contact with LCD fluid, wash immediately with soap.

6) Conductivity is not guaranteed for models that use metal holders where solder connections between the metal holder and the PCB are not used. Please contact us to discuss appropriate ways to assure conductivity.

7) For models which use CFL:
   1. High voltage of 1000V or greater is applied to the CFL cable connector area. Care should be taken not to touch connection areas to avoid burns.
   2. Protect CFL cables from rubbing against the unit and thus causing the wire jacket to become worn.
   3. The use of CFLs for extended periods of time at low temperatures will significantly shorten their service life.

8) For models which use touch panels:
   1. Do not stack up modules since they can be damaged by components on neighboring modules.
   2. Do not place heavy objects on top of the product. This could cause glass breakage.

9) For models which use COG,TAB,or COF:
   1. The mechanical strength of the product is low since the IC chip faces out unprotected from the rear. Be sure to protect the rear of the IC chip from external forces.
   2. Given the fact that the rear of the IC chip is left exposed, in order to protect the unit from electrical damage, avoid installation configurations in which the rear of the IC chip runs the risk of making any electrical contact.

10) Models which use flexible cable, heat seal, or TAB:
   1. In order to maintain reliability, do not touch or hold by the connector area.
   2. Avoid any bending, pulling, or other excessive force, which can result in broken connections.

11) have an adverse effect on connecting parts (LCD panel-TCP / HEAT SEAL / FPC / etc., PCB-TCP / HEAT SEAL / FPC etc., TCP-HEAT SEAL, TCP-FPC, HEAT SEAL-FPC, etc.,) depending on its materials.
   Please check and evaluate these materials carefully before use.

12) In case of acrylic plate is attached to front side of LCD panel, cloudiness (very small cracks) can occur on acrylic plate, being influenced by some components generated from polarizer film.
   Please check and evaluate those acrylic materials carefully before use.

11.Warranty

This product has been manufactured to your company's specifications as a part for use in your company's general electronic products. It is guaranteed to perform according to delivery specifications. For any other use apart from general electronic equipment, we cannot take responsibility if the product is used in medical devices, nuclear power control equipment, aerospace equipment, fire and security systems, or any other applications in which there is a direct risk to human life and where extremely high levels of reliability are required. If the product is to be used in any of the above applications, we will need to enter into a separate product liability agreement.

1. We cannot accept responsibility for any defect, which may arise from additional manufacturing of the product (including disassembly and reassembly), after product delivery.

2. We cannot accept responsibility for any defect, which may arise after the application of strong external force to the product.

3. We cannot accept responsibility for any defect, which may arise due to the application of static electricity after the product has passed your company's acceptance inspection procedures.

4. When the product is in CFL models, CFL service life and brightness will vary According to the performance of the inverter used, leaks, etc. We cannot accept responsibility for product performance, reliability, or defect, which may arise.

5. We cannot accept responsibility for intellectual property of a third party, which may arise through the application of our product to your assembly with exception to those issues relating directly to the structure or method of manufacturing of our product.

6. Optrex will not be held responsible for any quality guarantee issue for defect products judged as Optrex-origin longer than 2 (two) years from Optrex production or 1(one) year from Optrex, Optrex America, Optrex Europe delivery which ever comes later.