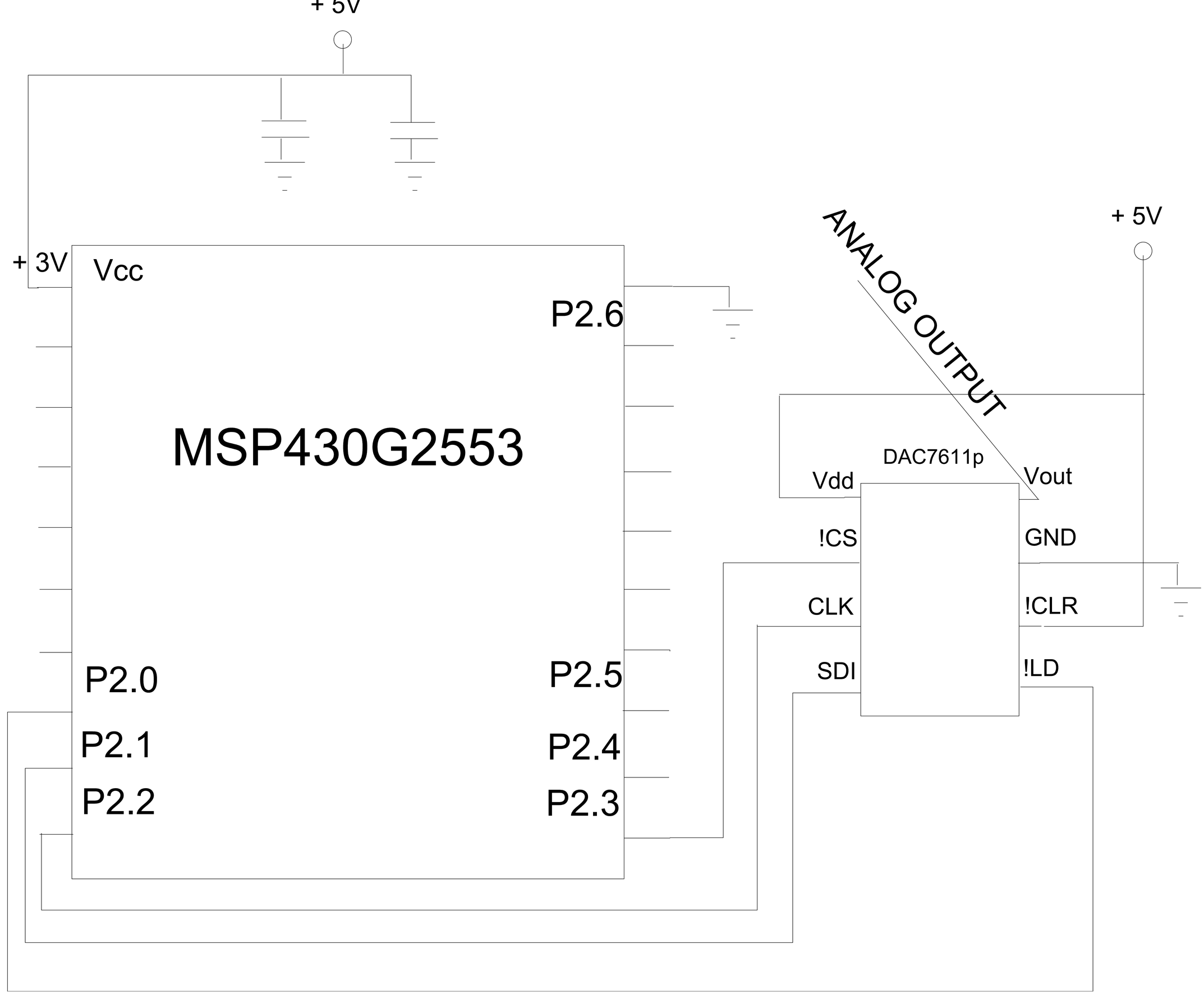
+ 5V
+ 3V
Vcc
P2.6
MSP430G2553
P2.0
P2.1
P2.2
P2.5
P2.4
P2.3
ANALOG OUTPUT
+ 5V
DAC7611p
Vdd
Vout
!CS
GND
CLK
!CLR
SDI
!LD