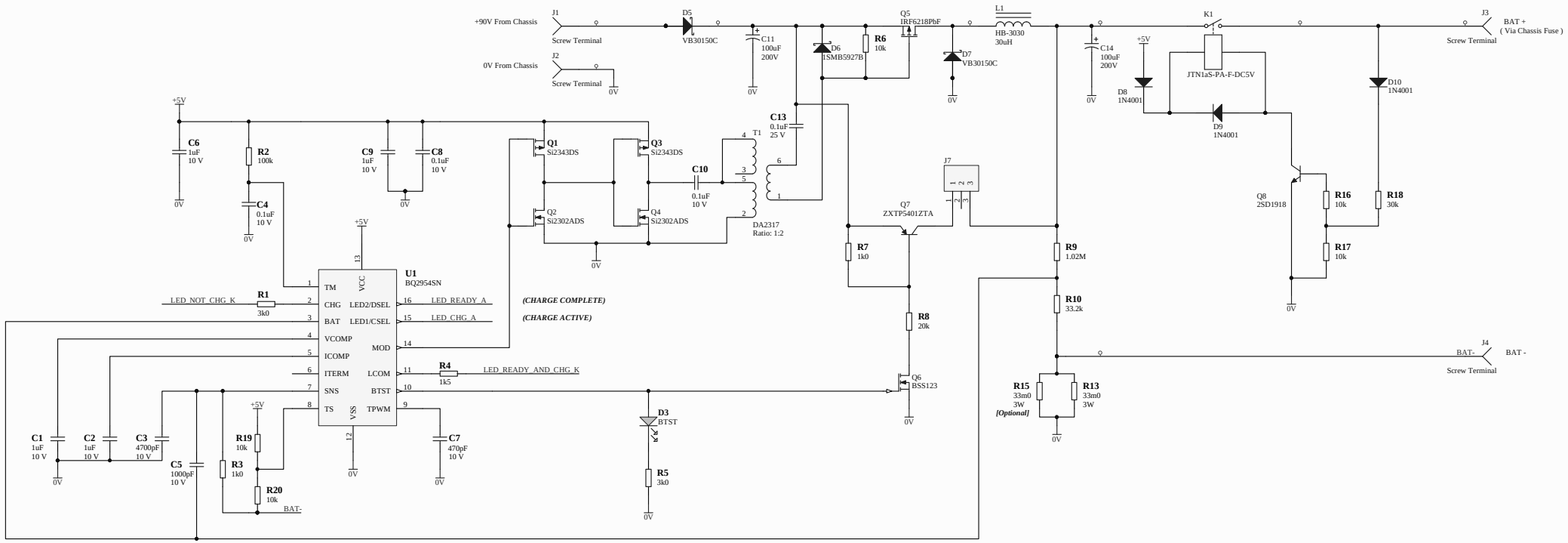
+90V From Chassis
J1
Screw Terminal
0V From Chassis
J2
Screw Terminal
D5
VB30150C
C11
100uF
200V
D6
1SMB5927B
R6
10k
Q5
IRF6218PbF
D7
VB30150C
L1
HB-3030
30uH
C14
100uF
200V
K1
JTN1aS-PA-F-DC5V
D8
1N4001
D9
1N4001
D10
1N4001
J3
BAT +
(Via Chassis Fuse)
Screw Terminal
C6
1uF
10 V
R2
100k
C4
0.1uF
10 V
C9
1uF
10 V
C8
0.1uF
10 V
Q1
Si2343DS
Q2
Si2302ADS
Q3
Si2343DS
Q4
Si2302ADS
C10
0.1uF
10 V
C13
0.1uF
25 V
T1
DA2317
Ratio: 1:2
J7
Q7
ZXTP5401ZTA
R7
1k0
R8
20k
R9
1.02M
R10
33.2k
Q8
2SD1918
R16
10k
R17
10k
R18
30k
U1
BQ2954SN
TM
CHG
BAT
VCOMP
ICOMP
ITERM
SNS
TS
VCC
LED2/DSEL
LED1/CSEL
MOD
LCOM
BTST
TPWM
VSS
LED_NOT_CHG_K
R1
3k0
LED_READY_A
LED_CHG_A
(CHARGE COMPLETE)
(CHARGE ACTIVE)
R4
1k5
LED_READY_AND_CHG_K
Q6
BSS123
R15
33m0
3W
[Optional]
R13
33m0
3W
J4
BAT-
BAT -
Screw Terminal
C1
1uF
10 V
C2
1uF
10 V
C3
4700pF
10 V
C5
1000pF
10 V
R3
1k0
R19
10k
R20
10k
BAT-
C7
470pF
10 V
D3
BTST
R5
3k0
+5V
0V

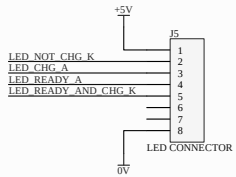
+5V
J5
LED_NOT_CHG_K
LED_CHG_A
LED_READY_A
LED_READY_AND_CHG_K
LED CONNECTOR
0V

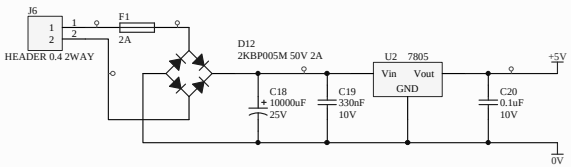
J6
HEADER 0.4 2WAY
F1
2A
D12
2KBP005M 50V 2A
C18
10000uF
25V
C19
330nF
10V
U2 7805
Vin
Vout
GND
C20
0.1uF
10V
+5V
0V

MH2 MH4 MH5