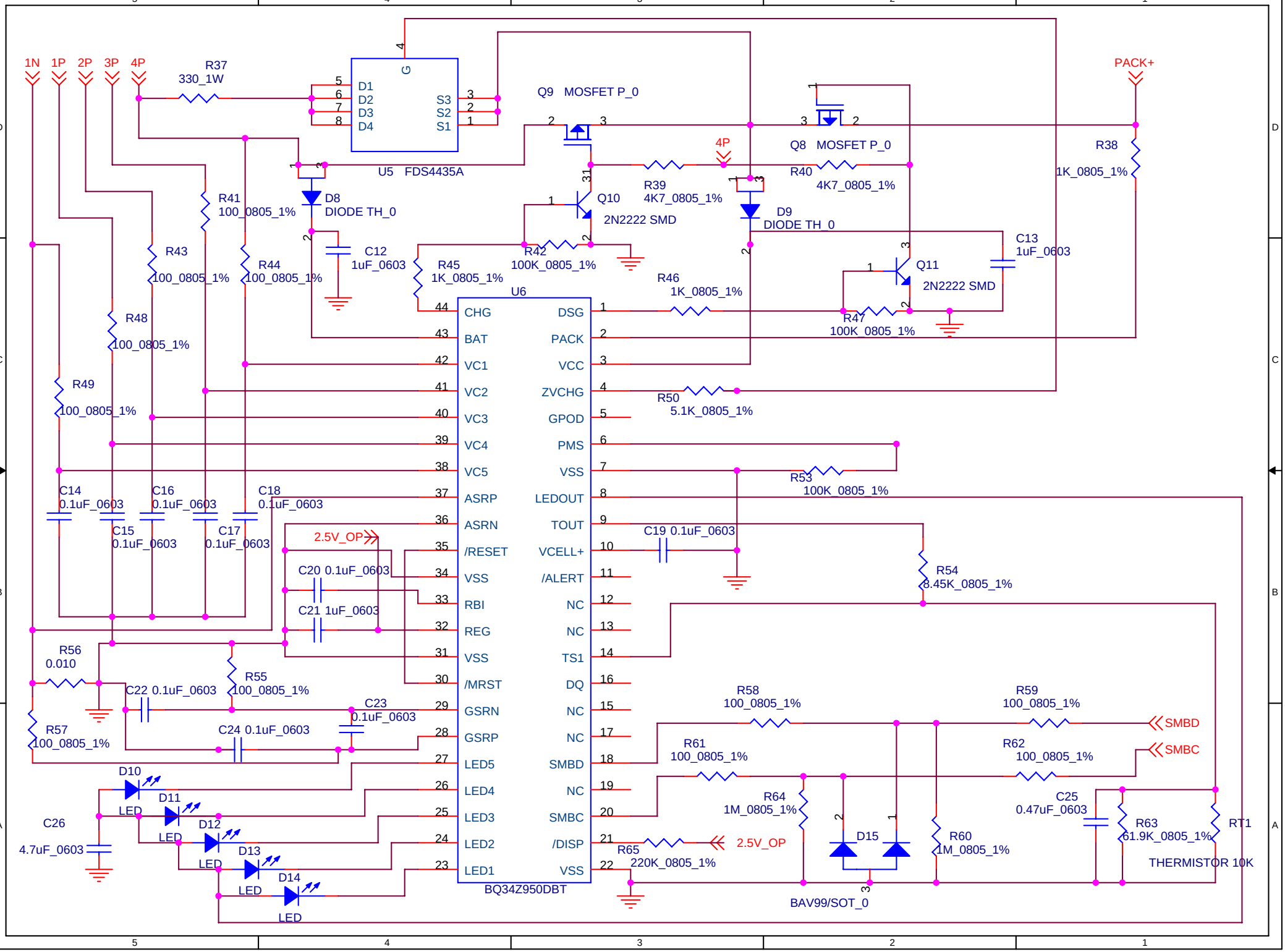
1N
1P
2P
3P
4P
R37
330_1W
U5 FDS4435A
D1
D2
D3
D4
S3
S2
S1
G
Q9 MOSFET P_0
Q8 MOSFET P_0
PACK+
R38
1K_0805_1%
R39
4K7_0805_1%
R40
4K7_0805_1%
D8
DIODE TH_0
D9
DIODE TH_0
Q10
2N2222 SMD
Q11
2N2222 SMD
R41
100_0805_1%
R43
100_0805_1%
R44
100_0805_1%
R48
100_0805_1%
R49
100_0805_1%
C12
1uF_0603
C13
1uF_0603
R42
100K_0805_1%
R45
1K_0805_1%
R46
1K_0805_1%
R47
100K_0805_1%
U6
CHG
BAT
VC1
VC2
VC3
VC4
VC5
ASRP
ASRN
/RESET
VSS
RBI
REG
VSS
/MRST
GSRN
GSRP
LED5
LED4
LED3
LED2
LED1
DSG
PACK
VCC
ZVCHG
GPOD
PMS
VSS
LEDOUT
TOUT
VCELL+
/ALERT
NC
NC
TS1
DQ
NC
NC
SMBD
NC
SMBC
/DISP
VSS
BQ34Z950DBT
R50
5.1K_0805_1%
R53
100K_0805_1%
R54
8.45K_0805_1%
C14
0.1uF_0603
C15
0.1uF_0603
C16
0.1uF_0603
C17
0.1uF_0603
C18
0.1uF_0603
C19 0.1uF_0603
2.5V_OP
C20 0.1uF_0603
C21 1uF_0603
R56
0.010
R55
100_0805_1%
C22 0.1uF_0603
C23
0.1uF_0603
C24 0.1uF_0603
R57
100_0805_1%
R58
100_0805_1%
R59
100_0805_1%
SMBD
SMBC
R61
100_0805_1%
R62
100_0805_1%
R64
1M_0805_1%
C25
0.47uF_0603
R63
61.9K_0805_1%
RT1
THERMISTOR 10K
D15
R60
1M_0805_1%
R65
220K_0805_1%
2.5V_OP
BAV99/SOT_0
D10
D11
D12
D13
D14
LED
C26
4.7uF_0603