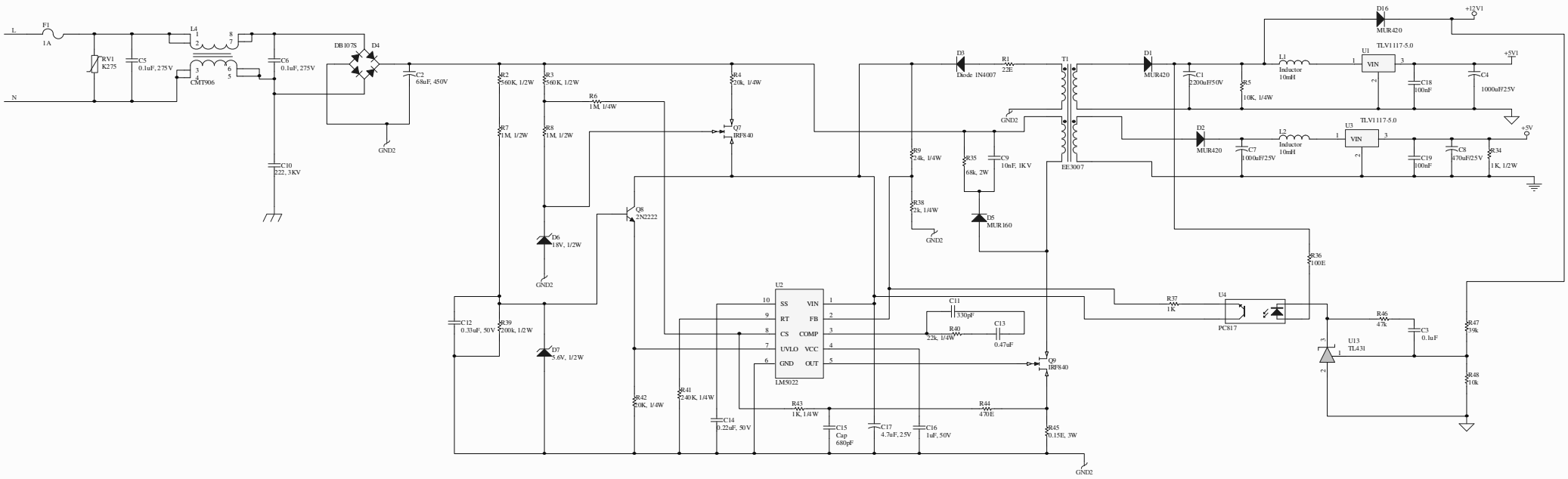

Title		
Size A2	Number	Revision
Date: 2/12/2013	Sheet of	
File: D:\pcb design\..\PSU BOARD V2.0.SCHDOC	Drawn By:	