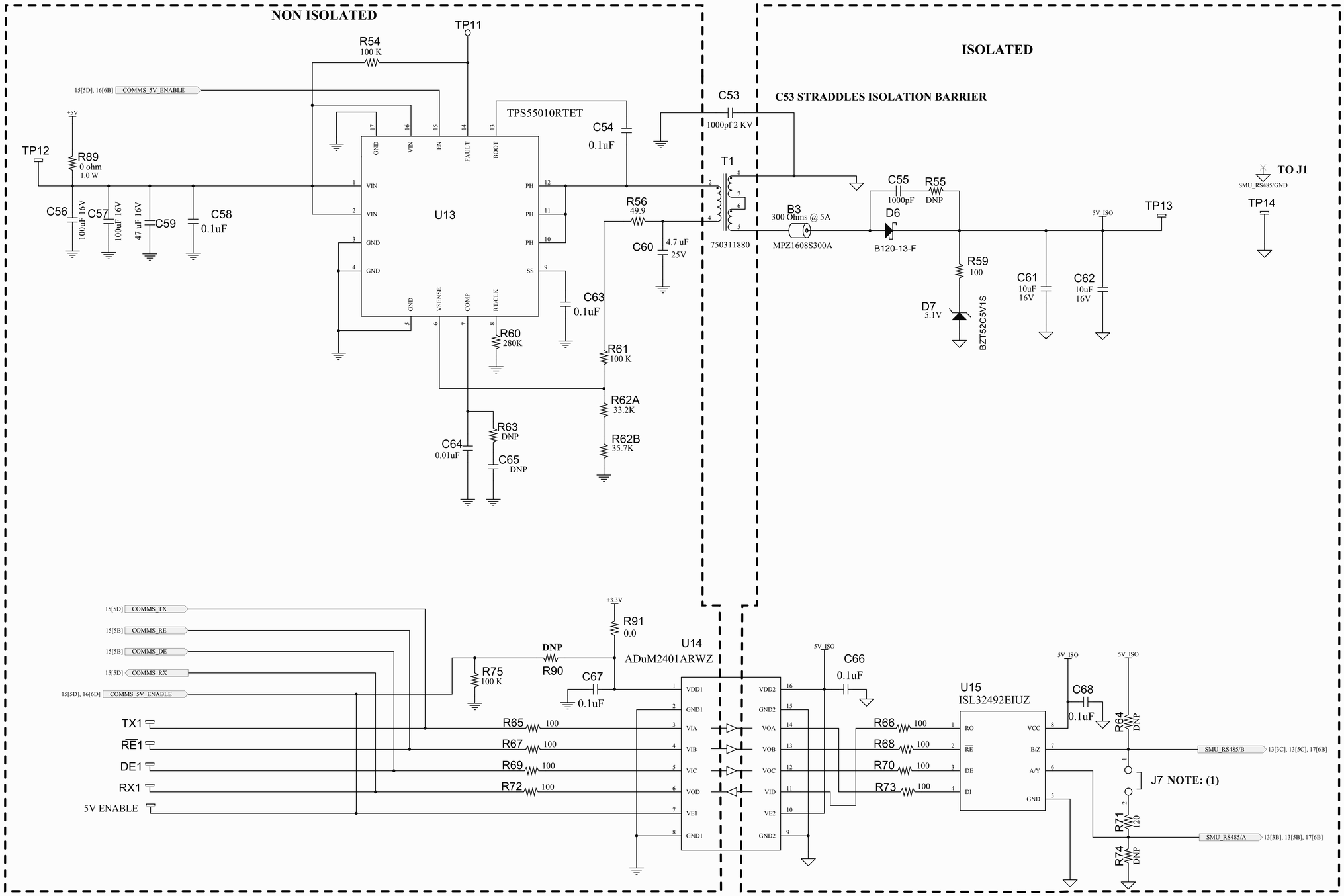

NOTE: (1) TERMINATE AS NEEDED J7)

LAYOUT NOTE:
NOMINAL AIR GAP CLEARANCE 8mm

Title		
Size C	Number	Revision B
Date: 12/6/2012		Sheet 7 of 20
File: C:\Program Files\..\17_B.SchDoc		Drawn By: