POWER SOURCES

+1.2V OUTPUT

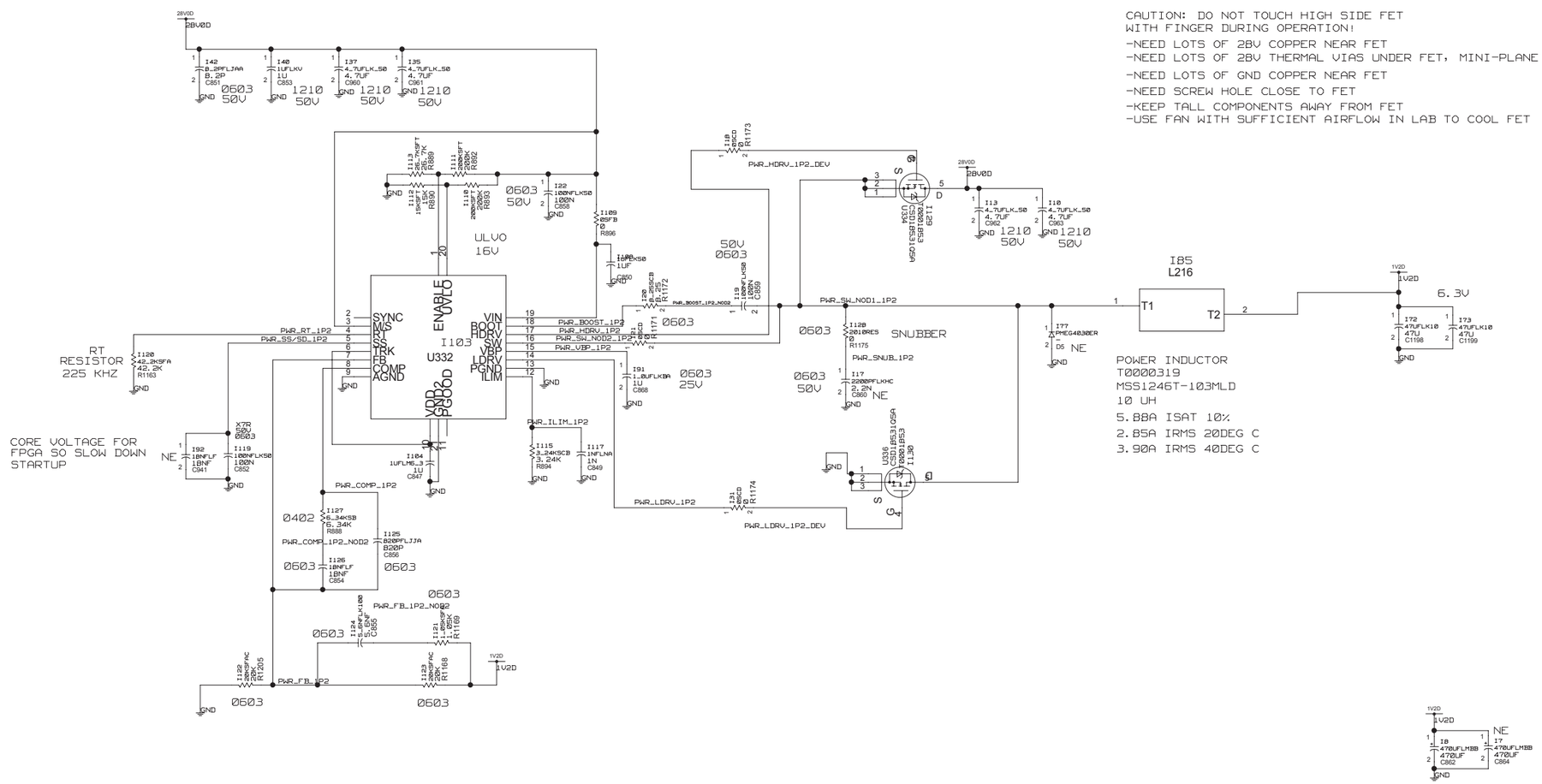

CAUTION: DO NOT TOUCH HIGH SIDE FET
WITH FINGER DURING OPERATION!

- -NEED LOTS OF 28V COPPER NEAR FET
- -NEED LOTS OF 28V THERMAL VIAS UNDER FET, MINI-PLANE
- -NEED LOTS OF GND COPPER NEAR FET
- -NEED SCREW HOLE CLOSE TO FET
- -KEEP TALL COMPONENTS AWAY FROM FET
- -USE FAN WITH SUFFICIENT AIRFLOW IN LAB TO COOL FET

TEKTELIC COMMUNICATIONS INC.

TITLE: KeyStone eNodeB 1V2 SUPPLY	REV: A	DATE: Jan 16, 2013
DESIGNER: K Strom n/a		TCODE: T0001941
		PAGE: 79 OF 82

PROPRIETARY INFORMATION
THE INFORMATION CONTAINED IN THIS DOCUMENT IS THE PROPERTY OF TEKTELIC COMMUNICATIONS INC EXCEPT AS SPECIFICALLY AUTHORIZED IN WRITING BY TEKTELIC COMMUNICATIONS INC. THE HOLDER OF THIS DOCUMENT:
1) SHALL KEEP ALL INFORMATION CONTAINED HEREIN CONFIDENTIAL AND SHALL PROTECT SAME IN WHOLE OR IN PART FROM DISCLOSURE AND DISSEMINATION TO ALL THIRD PARTIES