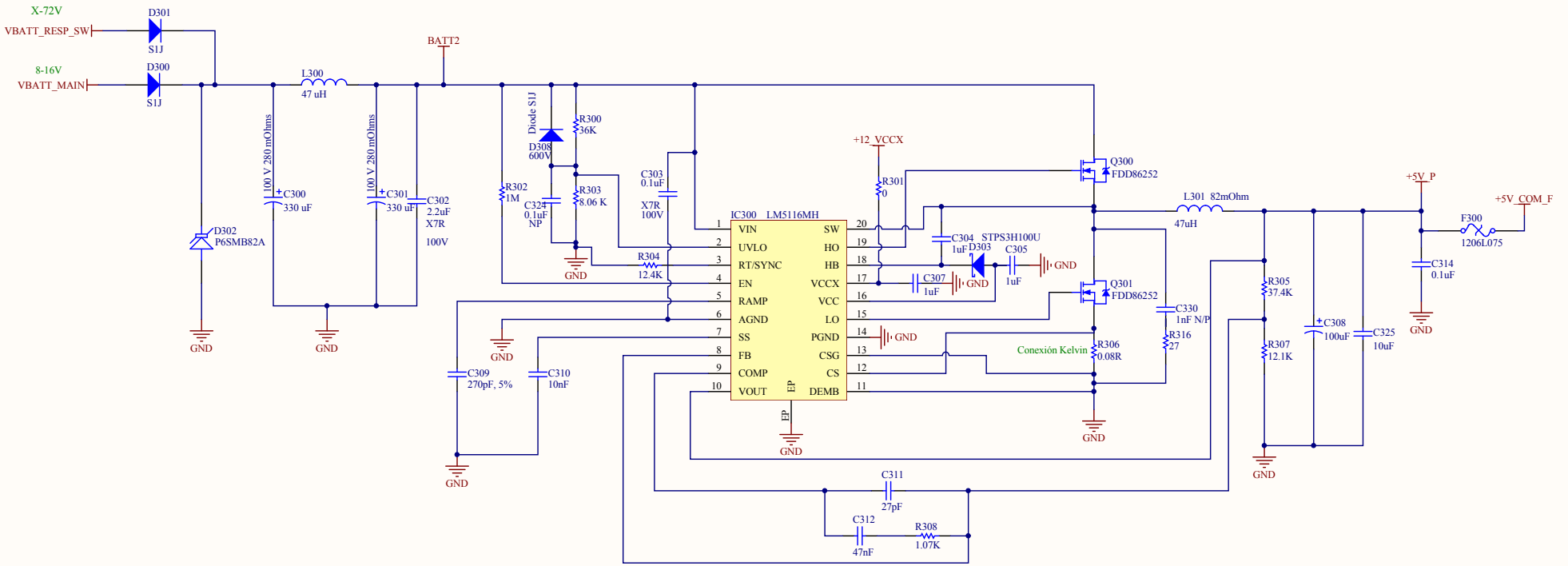

ModuTram	Title	Regulador 72 V To 5 V @ 1.5 A		
	Size B	SCH Rev	PCB Rev	Drawn By Z. Escudero
				Approved By *
	Date 10/06/2013			Sheet 3 of 28
	Sheet Name 3_POWER_REGULATORS_P1.SchDoc			