NOTES:
1) Preliminary Design Only.
2) Use Caution – High Voltage Present.

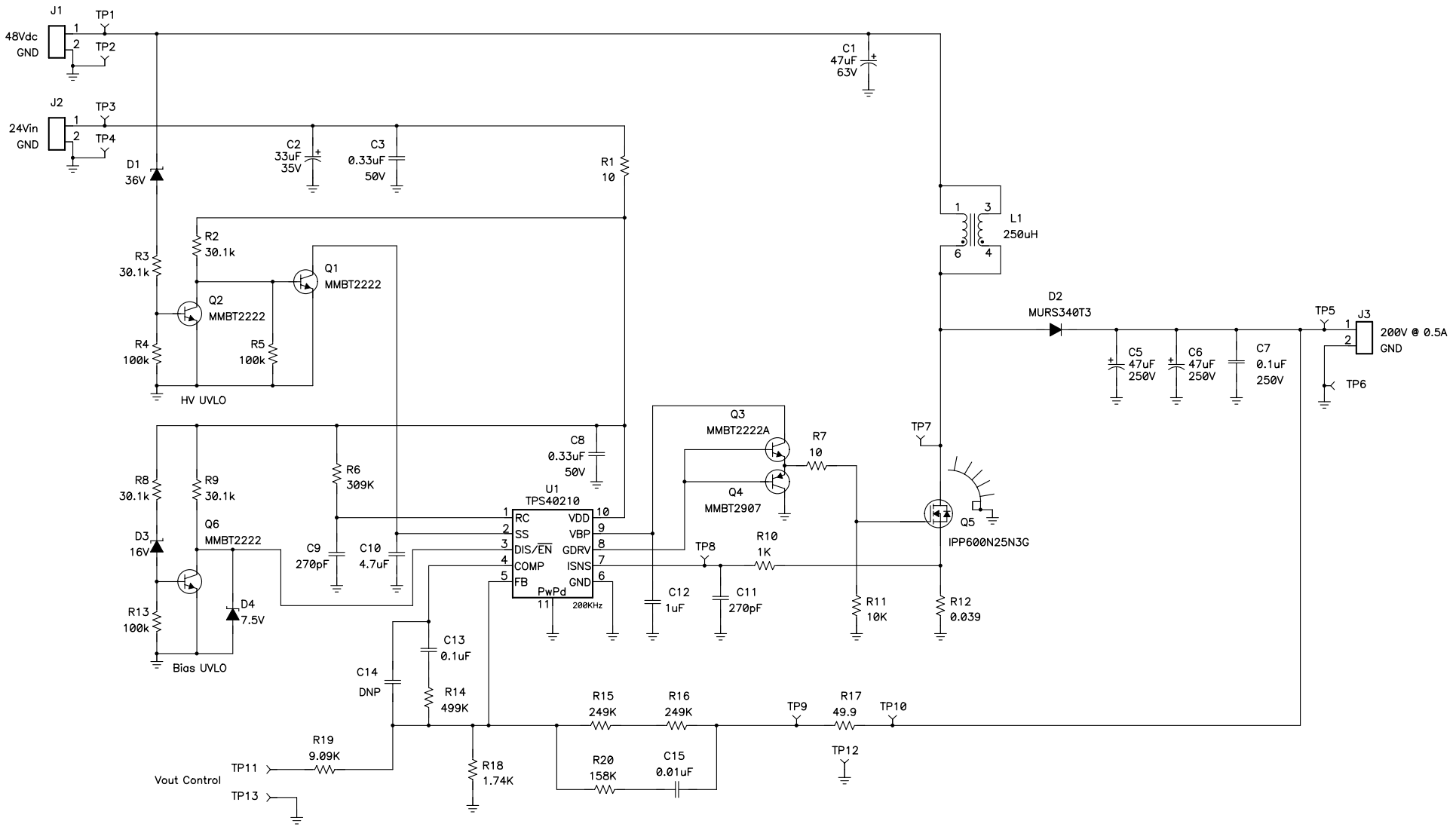

0V => Vout = 239V
open => Vout = 201V
1.25V => Vout = 171V
for R18 = 1.74K and R19 = 9.09K

0V => Vout = 152V
open => Vout = 134V
1.25V => Vout = 120V
for R18 = 2.61K and R19 = 20K

Texas Instruments

Title	TPS40210 200V@0.5A Boost		
Size C	Number PMP5796		Rev A
Date	7/8/10	Drawn by	J Betten
Filename	PMP5796_ REVA.SCH	Sheet	1 of 1