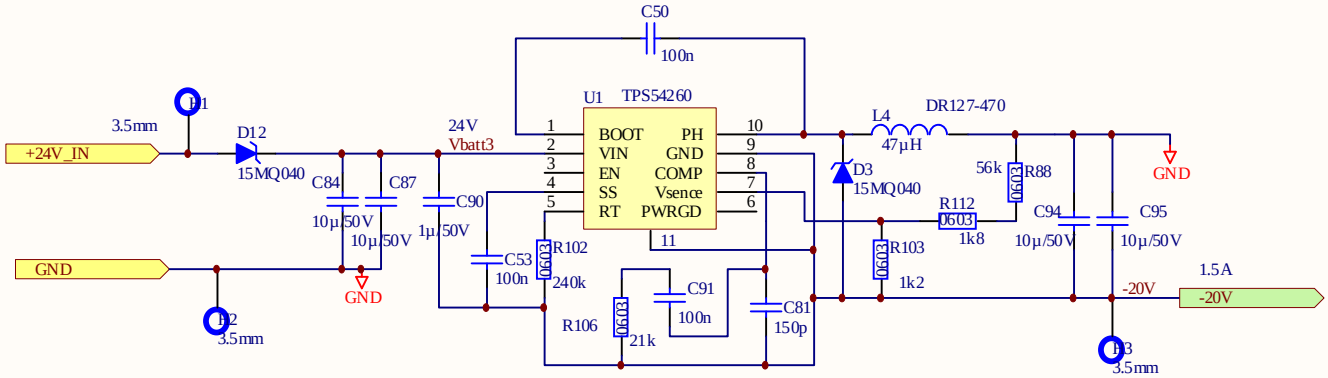

I will change D3 to 60V type

C84,C87,C94,C95 =
X7R. 50V, 10%
RS Components No: 7588106

Title	Marking Machine, power		Elektronik Design AB Metropol 851 71 SUNDSVALL
Size: A4	Number:	Revision: 1	
Date: 2012-12-18	Time: 08:46:02	Sheet 6 of 6	stefan@edab.nu
File: M M Power_x.SCHDOC			