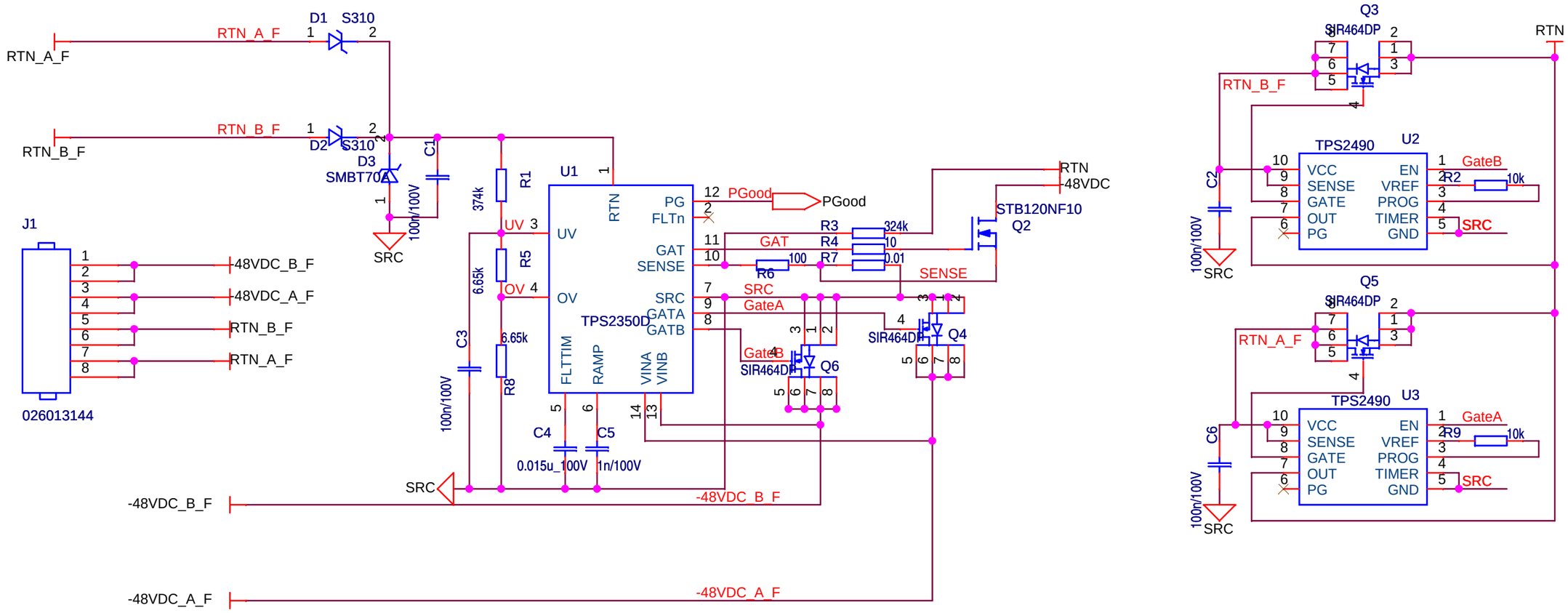

Title <Title>		
Size A4	Document Number <Doc>	Rev 0
Date: Thursday, April 18, 2013	Sheet 1 of 1	