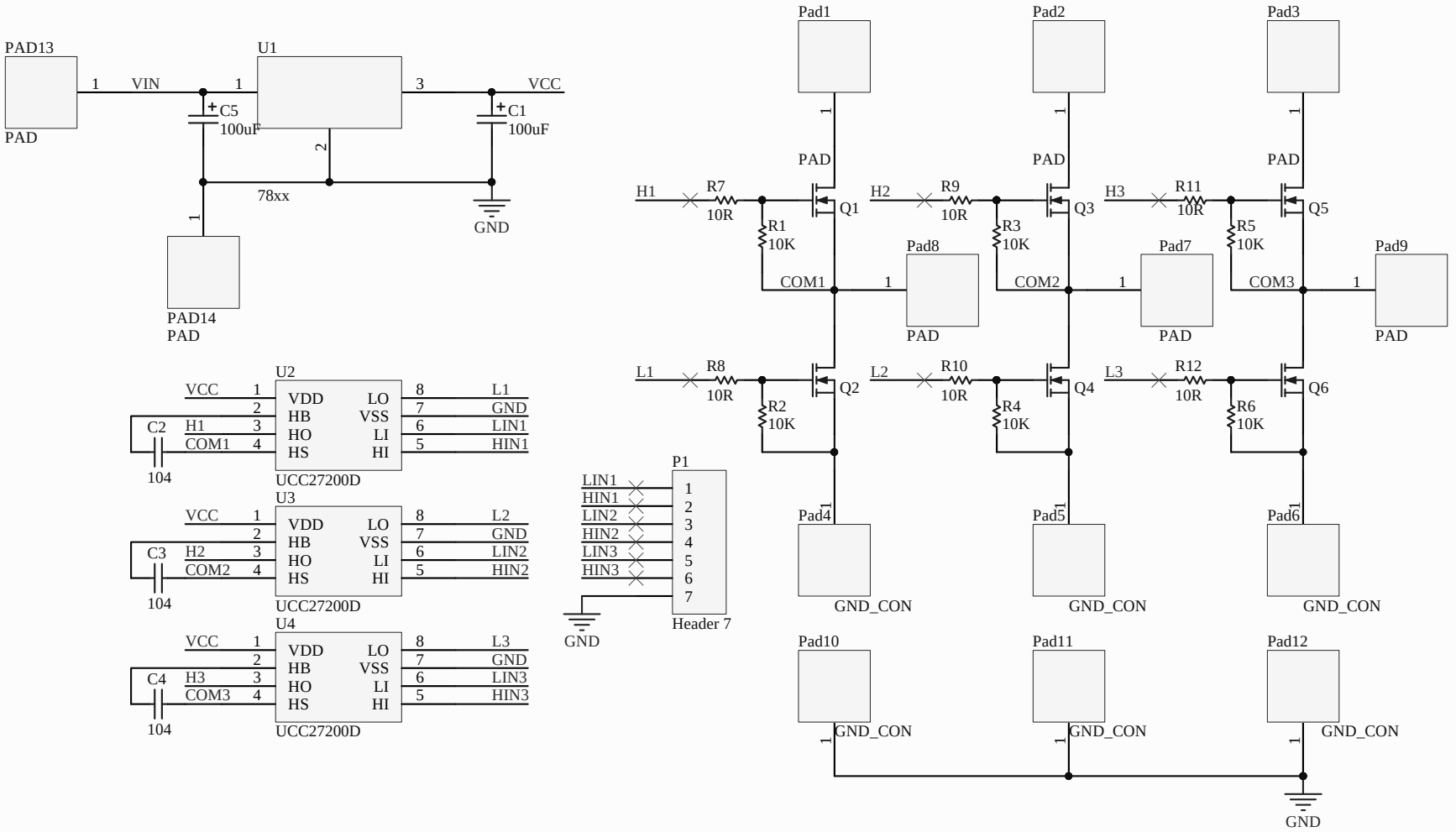

Title		
Size A	Number	Revision
Date: 8/13/2012	Sheet of	
File: C:\Documents and Settings\..\3-phase_mosfet.SchDoc	Drawn By:	