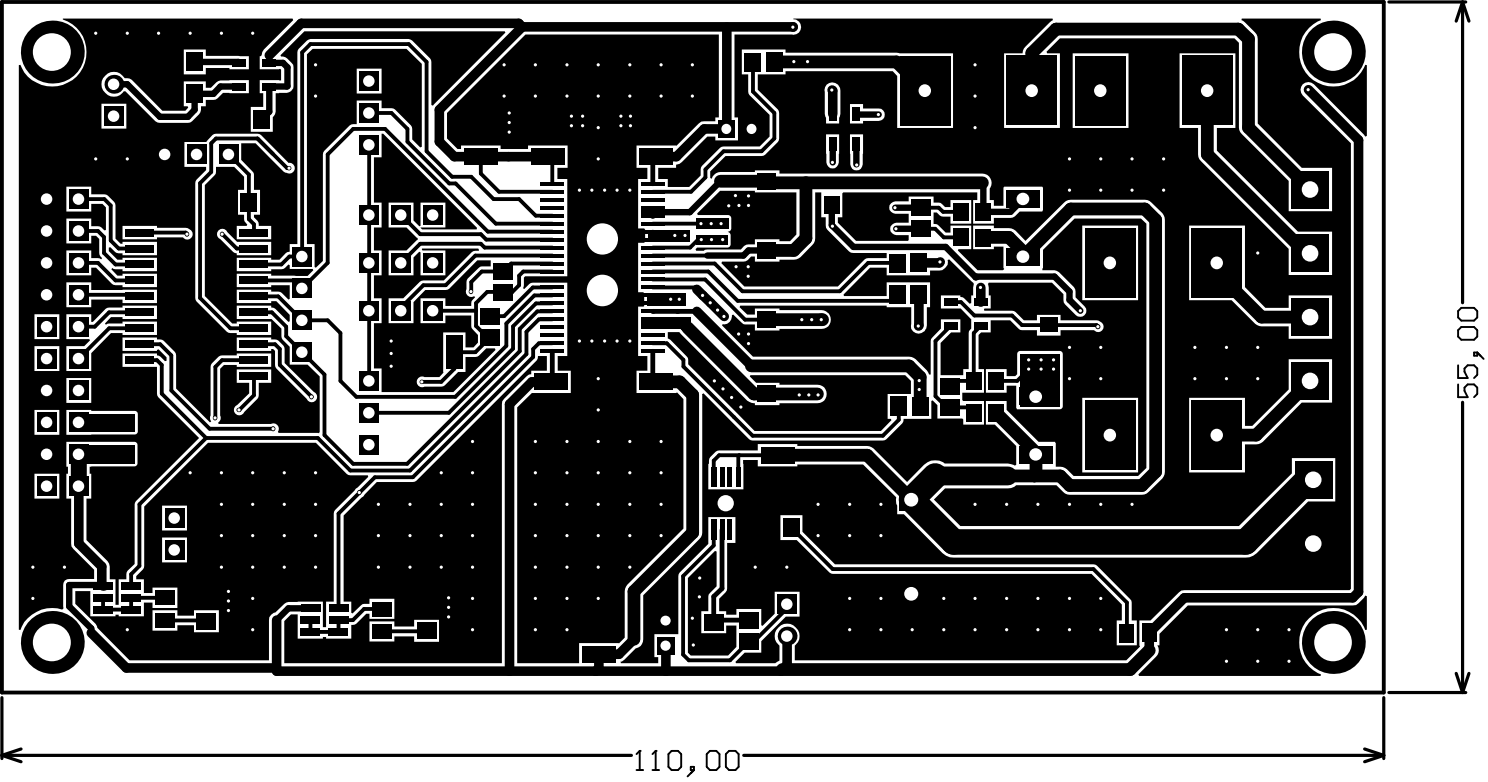
55,00
110,00

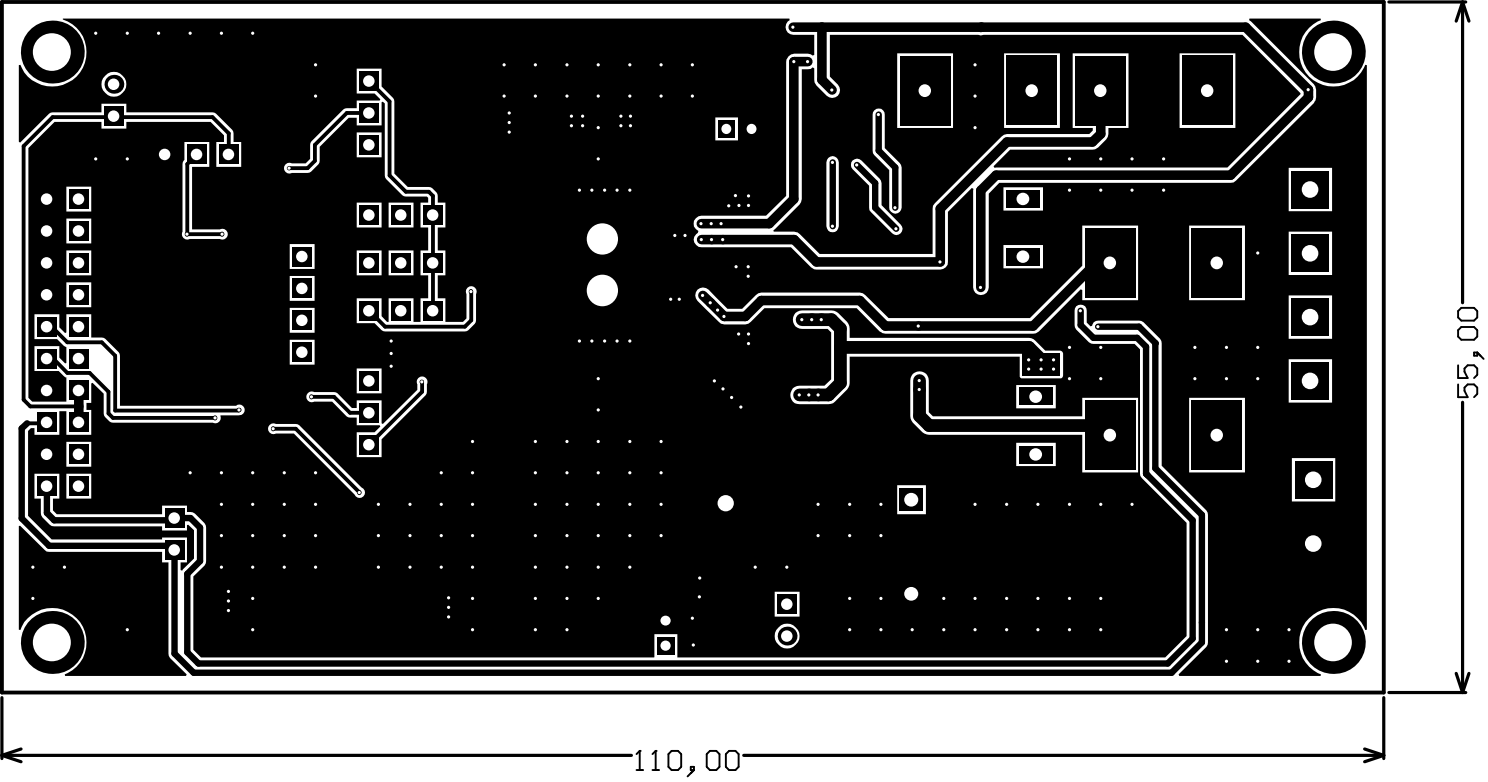
55,00
110,00

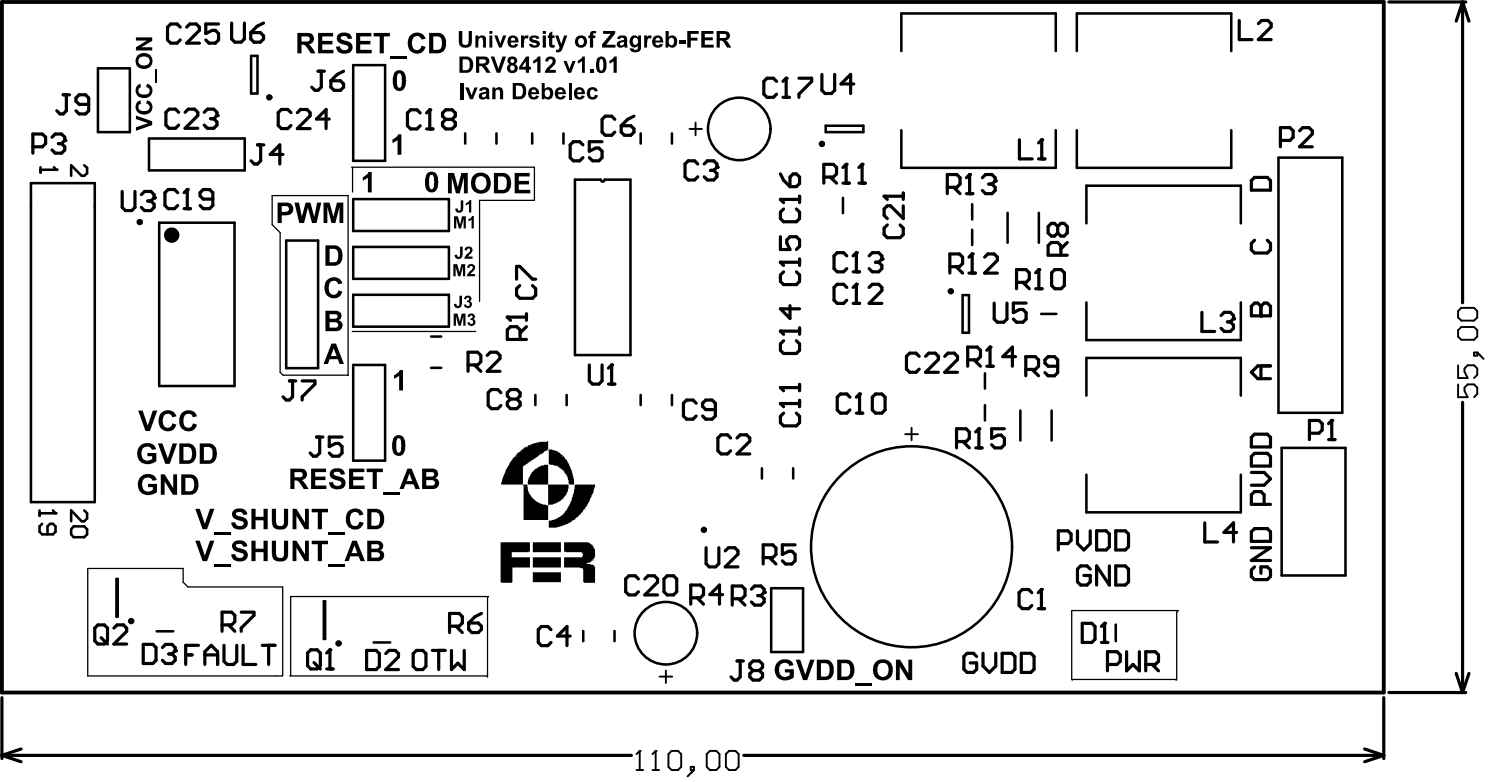
University of Zagreb-FER
DRV8412 v1.01
Ivan Debelec
RESET_CD
RESET_AB
MODE
PWM
J1 M1
J2 M2
J3 M3
VCC_ON
VCC
GVDD
GND
V_SHUNT_CD
V_SHUNT_AB
FAULT
OTW
GVDD_ON
PWR
PVDD
GND
P1
P2
P3
J4
J5
J6
J7
J8
J9
Q1
Q2
D1
D2
D3
U1
U2
U3
U4
U5
L1
L2
L3
L4
C1
C2
C3
C4
C5
C6
C7
C8
C9
C10
C11
C12
C13
C14
C15
C16
C17
C18
C19
C20
C21
C22
C23
C24
C25
R1
R2
R3
R4
R5
R6
R7
R8
R9
R10
R11
R12
R13
R14
R15
110,00
55,00

55,00
110,00

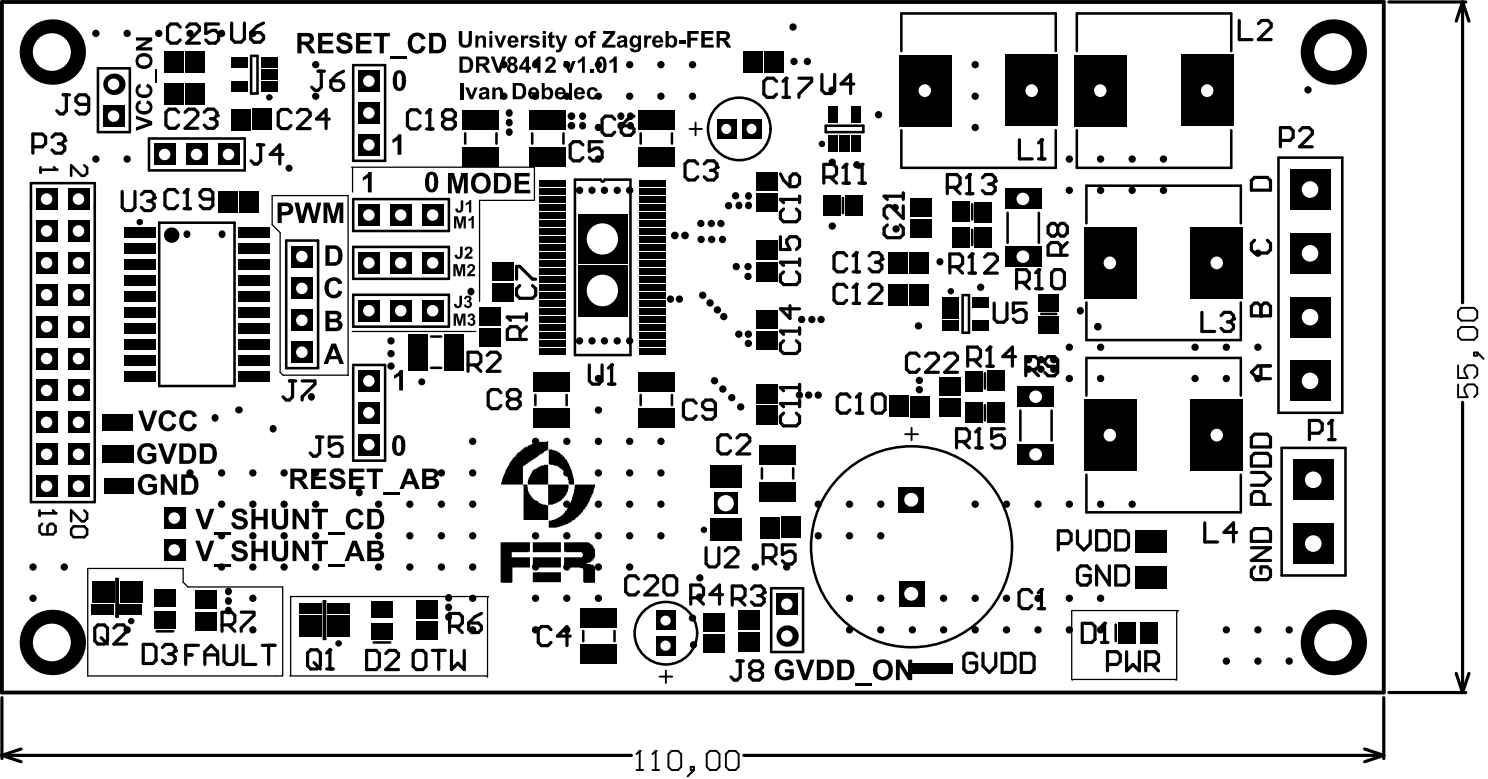
University of Zagreb-FER
DRV8412 v1.01
Ivan Dobelec
RESET_CD
RESET_AB
VCC_ON
MODE
PWM
VCC
GVDD
GND
V_SHUNT_CD
V_SHUNT_AB
FAULT
OTW
GVDD_ON
PVDD
PWR
110,00
55,00

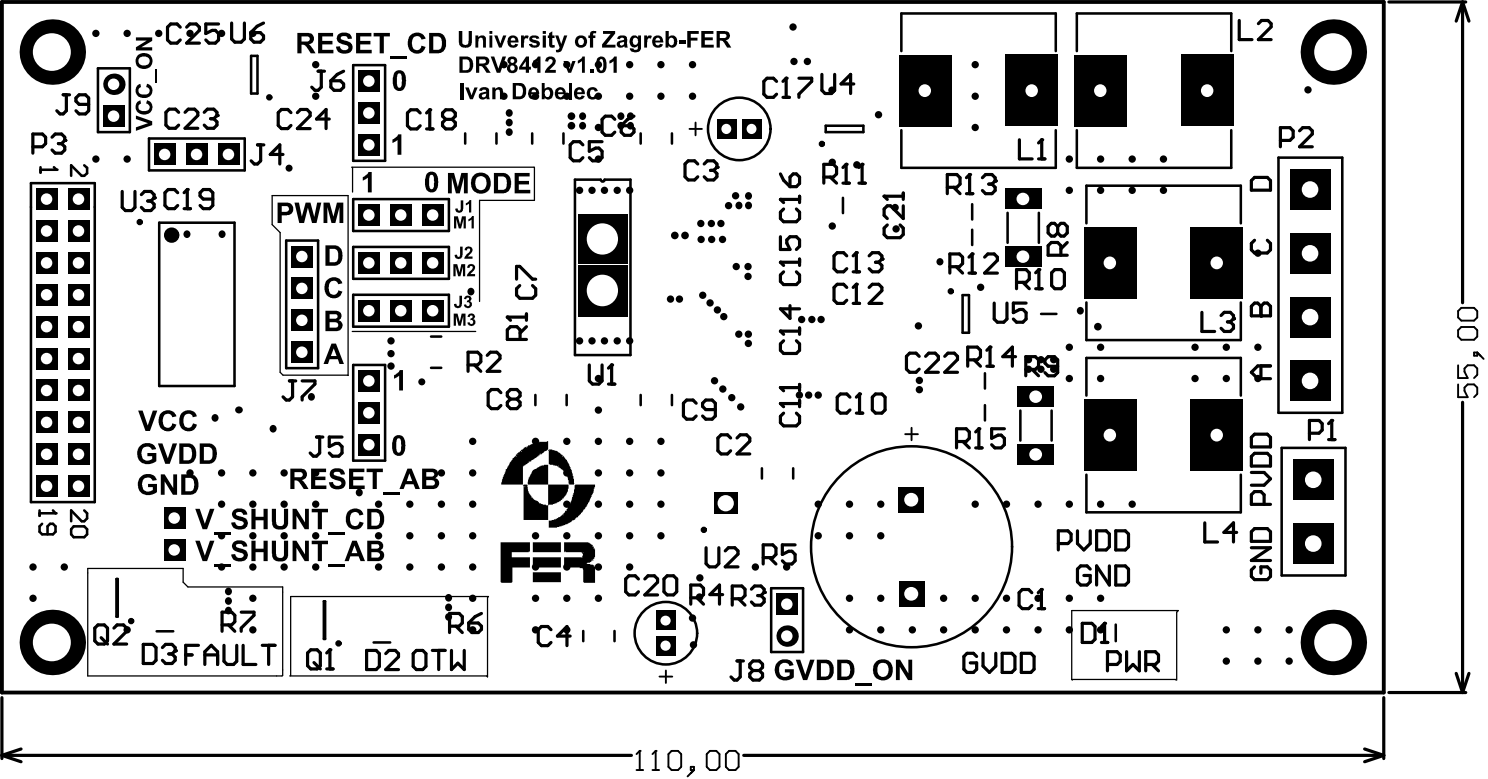
University of Zagreb-FER
DRV8412 v1.01
Ivan Debelec
RESET_CD
RESET_AB
MODE
PWM
VCC_ON
VCC
GVDD
GND
V_SHUNT_CD
V_SHUNT_AB
FAULT
OTW
GVDD_ON
PVDD
PWR
55,00
110,00