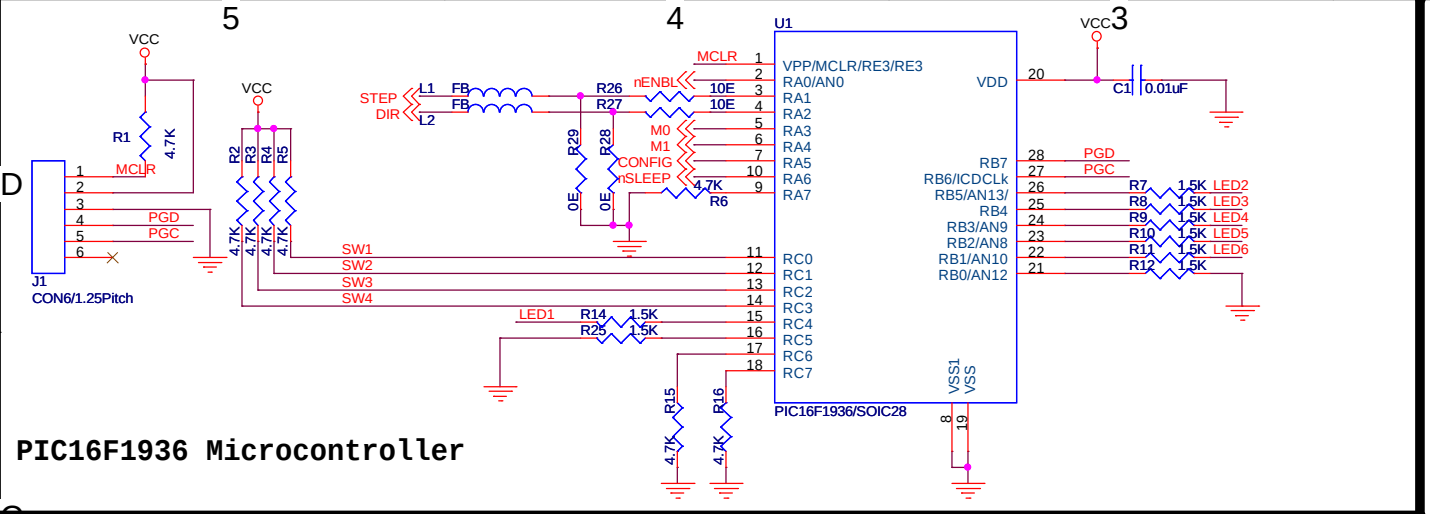


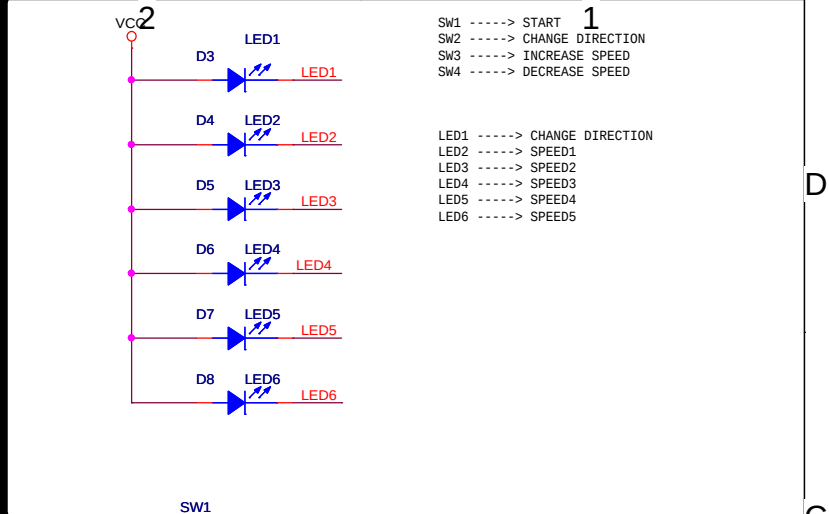


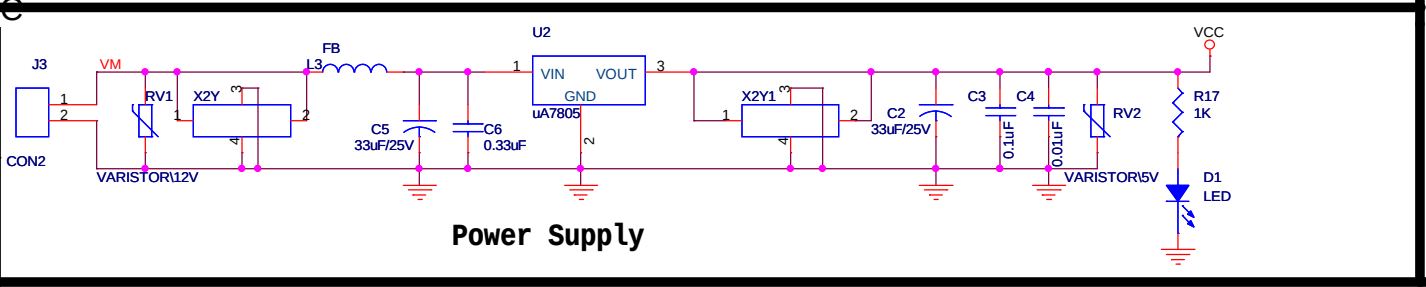

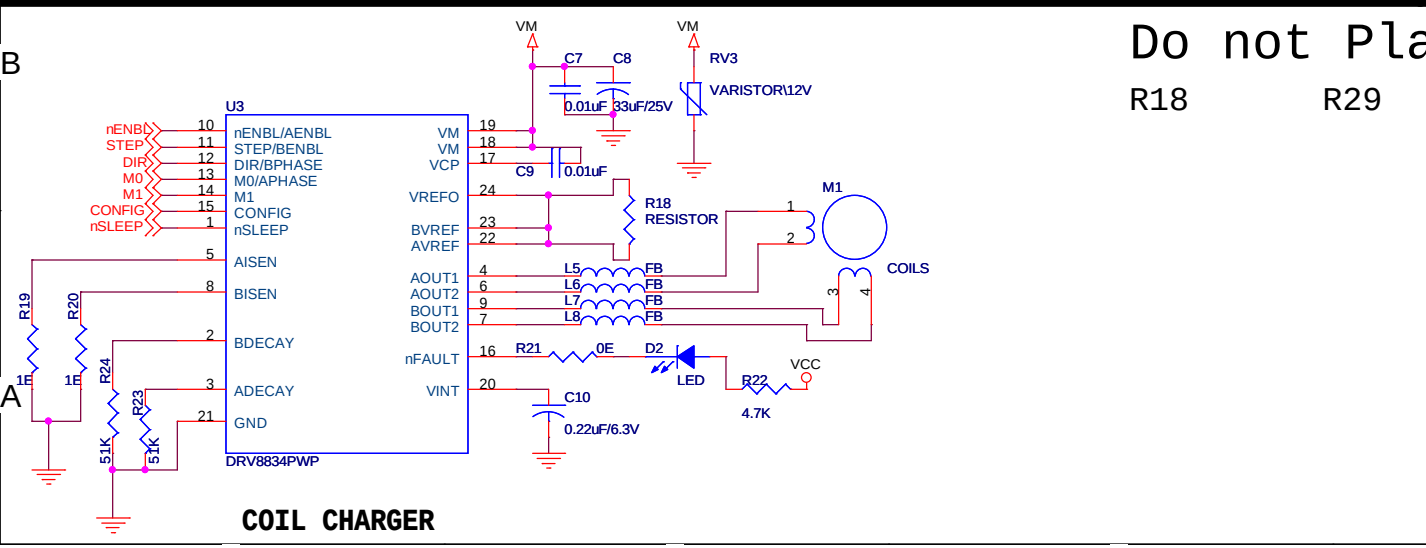


# Do not Place:

R18 R29

| Neuation Technologies Pvt. Ltd. | | |
|---|---|---|
| Title: Magnetic Stirrer | | |
| Size: Custom | Document Number: 1 | Rev: 2.1 |
| Date: Wednesday, October 30, 2013 | Sheet 1 of 1 | |