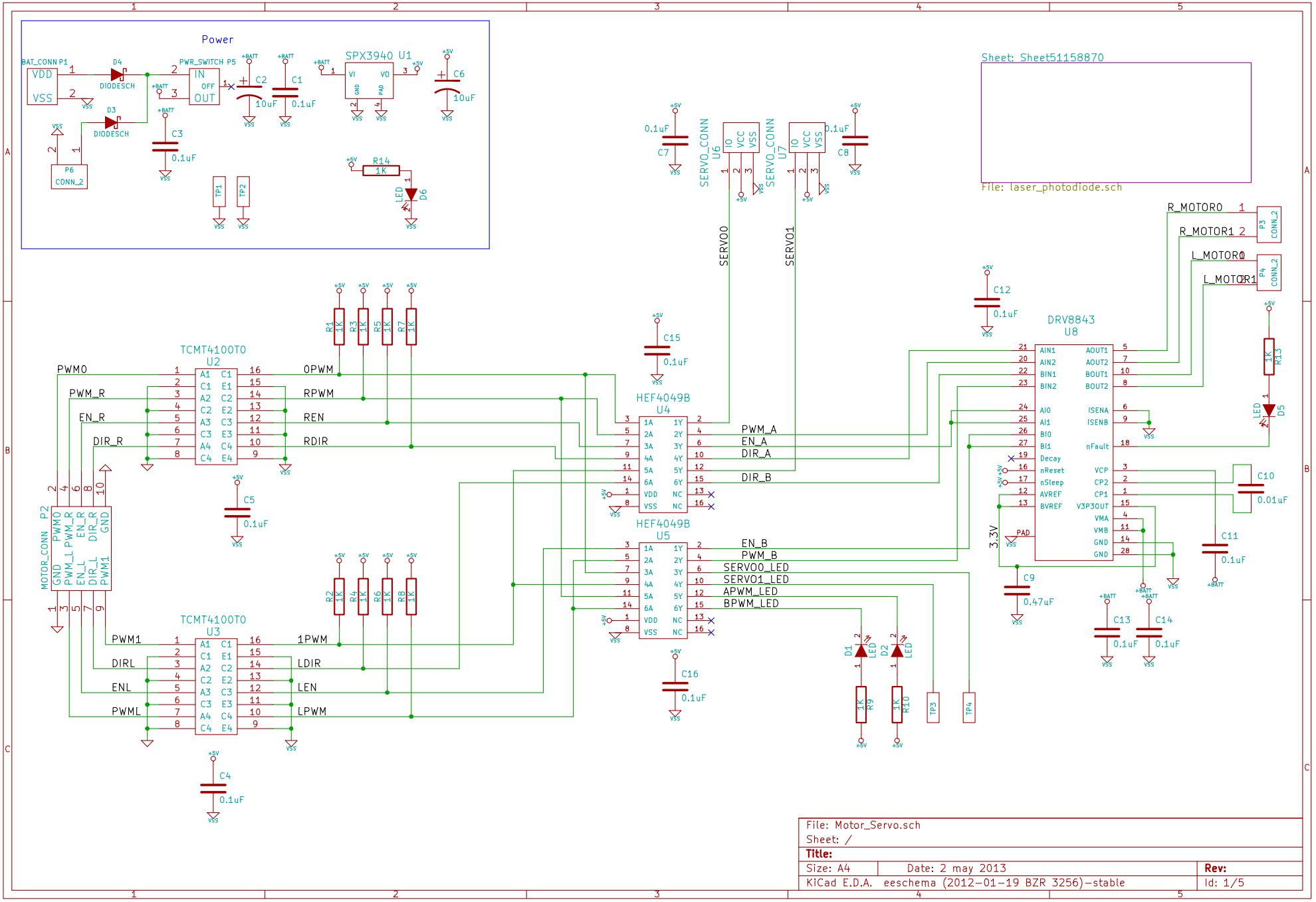

File: Motor_Servo.sch		
Sheet: /		
Title:		
Size: A4	Date: 2 may 2013	**Rev:**
KiCad E.D.A. eeschema (2012-01-19 BZR 3256)-stable		Id: 1/5