<TS3DV642 DDC_SCL/SDA pull up>

1. Master - Slave(Unfixed)

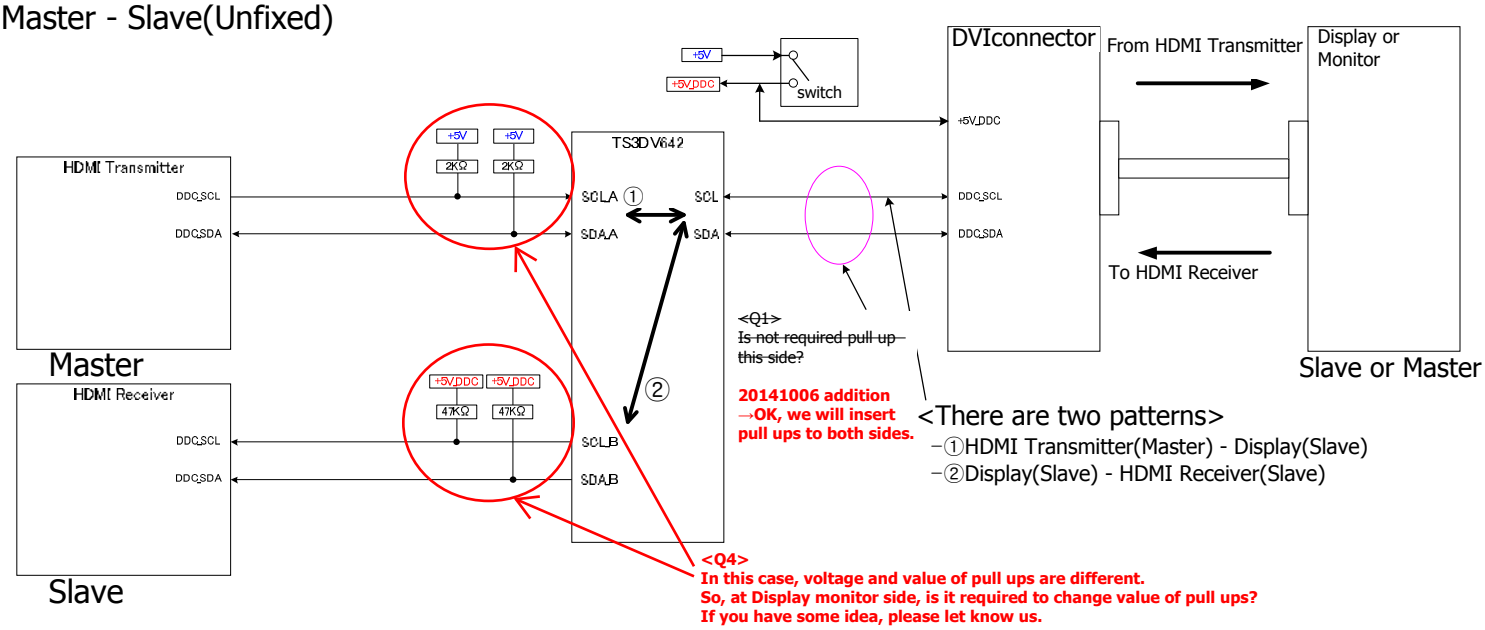

2. Master - Slave(Fixed-HDMI receiver and Display)

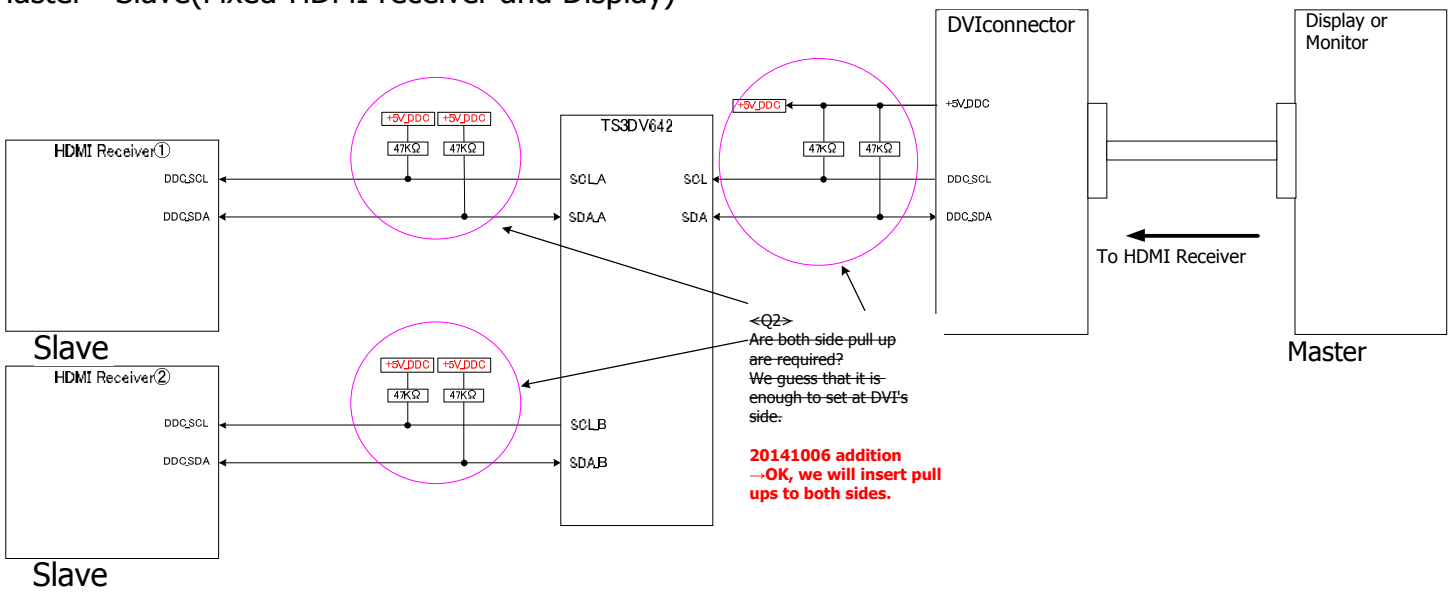
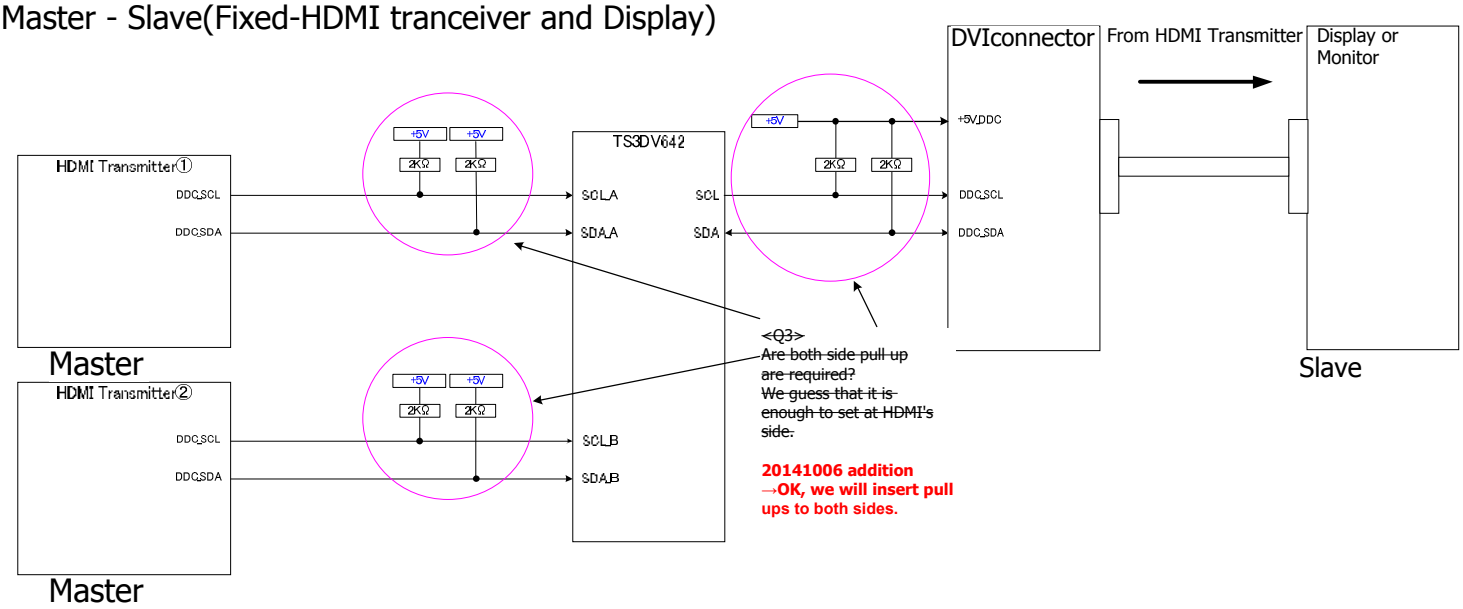
3. Master - Slave(Fixed-HDMI tranceiver and Display)