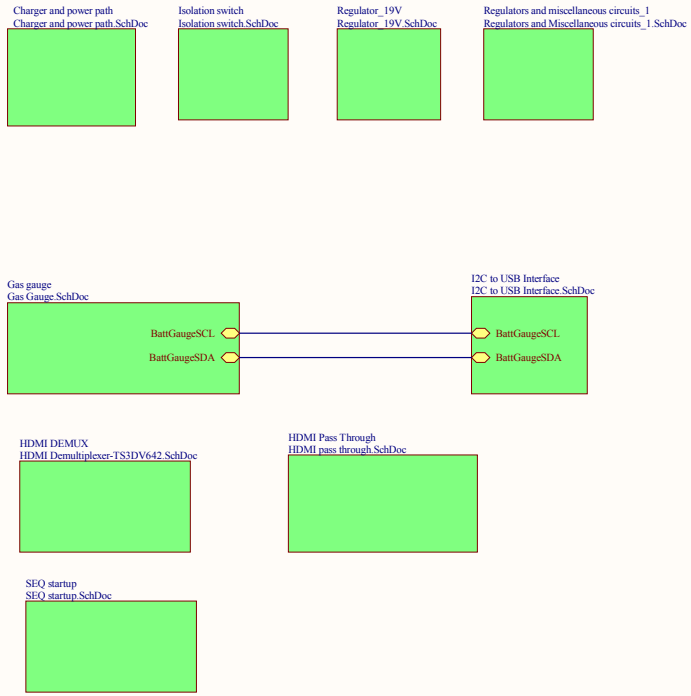

Notes:	Project:	Title:
Texas Wormhole	140146-Little Pig	TOP PAGE

RESTRICTED CONFIDENTIAL DOCUMENT

THIS DOCUMENT AND ALL INFORMATION CONTAINED IN THE DOCUMENT IS CONFIDENTIAL. YOU AGREE TO TAKE ALL ACTION NECESSARY TO MAINTAIN THE CONFIDENTIALITY OF THE DOCUMENT AND THE INFORMATION AND TO PREVENT ITS UNAUTHORISED DISCLOSURE OR USE BY ANY OTHER PERSON. YOU MUST NOT COPY OR REPRODUCE THE DOCUMENT IN ANY FORM AND MUST RETURN THE DOCUMENT IMMEDIATELY UPON DEMAND.

PRODUCT DEVELOPMENT TECHNOLOGIES,INC
One Corporate Drive, Suite 110, Lake Zurich, IL 60047
Ph: 1 847 821 3000 Fax: 1 847 821 3020

DO NOT SCALE - IF IN DOUBT ASK

Part Number:	Rev	Issue Date
*	*	*

Design	Date	Check	Date	Size	Scale	Sheet
*	2/25/2014	*	2/25/2014	11x17	None	1/10

CHARGER AND POWER PATH CONTROLLER

4012fa.pdf , Page 18 , Programming Input Current Limit

Rcl = 100mV/Ilim

Rcl = 0.1/12.5 = 0.008 Ohm

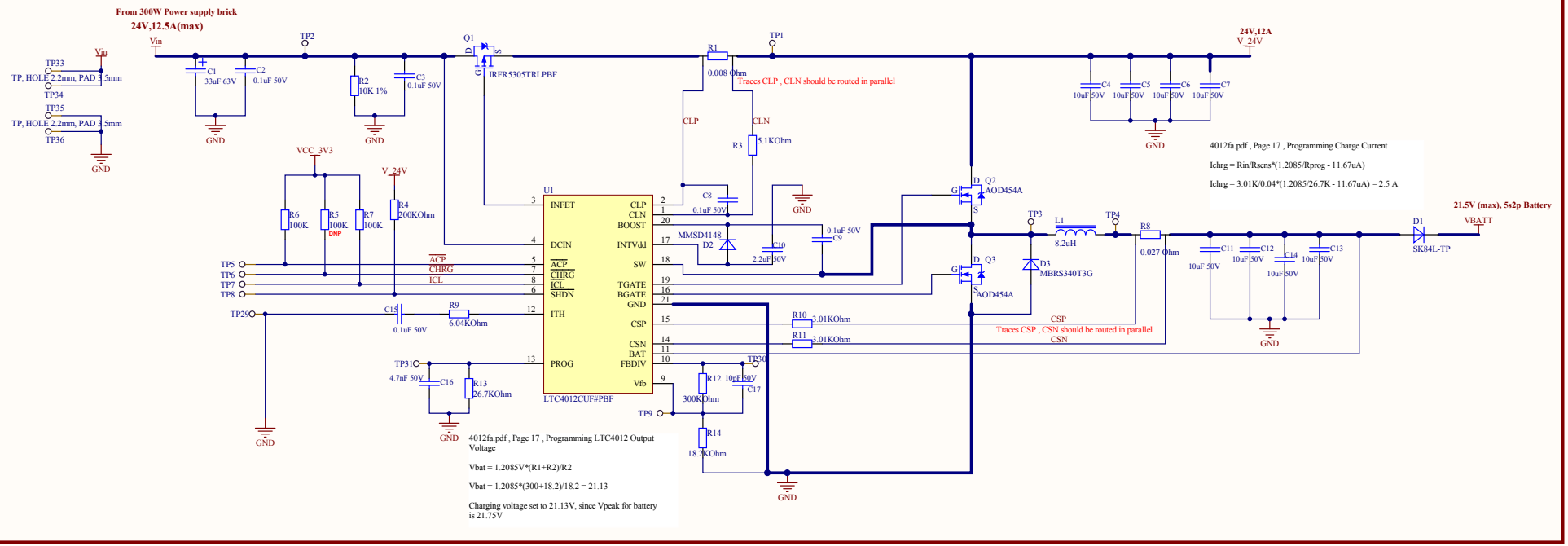

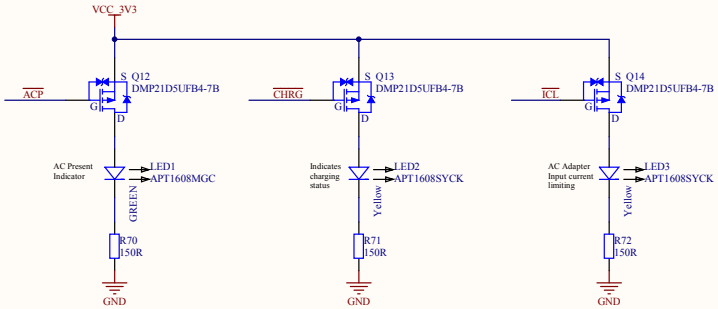

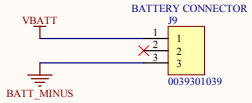

Notes:	Project:	Title:
Texas Wormhole	140146-Little Pig	CHARGER/POWER PATH

RESTRICTED CONFIDENTIAL DOCUMENT

THIS DOCUMENT AND ALL INFORMATION CONTAINED IN THE DOCUMENT IS CONFIDENTIAL. YOU AGREE TO TAKE ALL ACTION NECESSARY TO MAINTAIN THE CONFIDENTIALITY OF THE DOCUMENT AND THE INFORMATION AND TO PREVENT ITS UNAUTHORISED DISCLOSURE OR USE BY ANY OTHER PERSON. YOU MUST NOT COPY OR REPRODUCE THE DOCUMENT IN ANY FORM AND MUST RETURN THE DOCUMENT IMMEDIATELY UPON DEMAND.

PRODUCT DEVELOPMENT TECHNOLOGIES,INC
One Corporate Drive, Suite 110, Lake Zurich, IL 60047
Ph: 1 847 821 3000 Fax: 1 847 821 3020

DO NOT SCALE - IF IN DOUBT ASK

Part Number:	Rev	Issue Date
*	*	*

Design	Date	Check	Date	Size	Scale	Sheet
SK	2/25/2014	*	2/25/2014	11x17	None	2/10

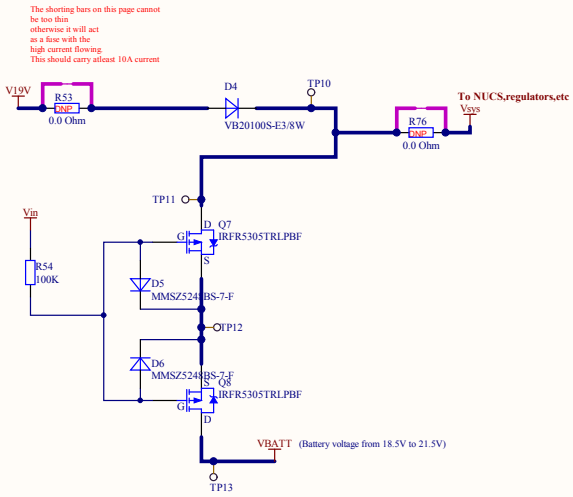

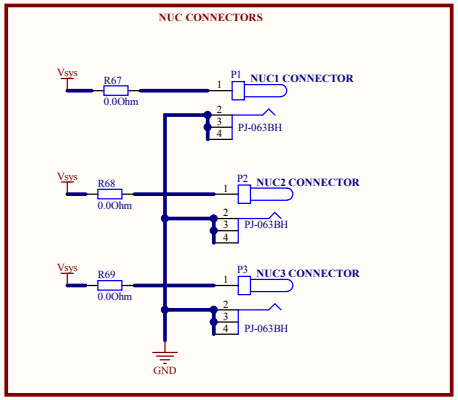

Notes:

Texas Wormhole

Project:

140146-Little Pig

Title:

ISOLATION CIRCUIT

RESTRICTED CONFIDENTIAL DOCUMENT

THIS DOCUMENT AND ALL INFORMATION CONTAINED IN THE DOCUMENT IS CONFIDENTIAL. YOU AGREE TO TAKE ALL ACTION NECESSARY TO MAINTAIN THE CONFIDENTIALITY OF THE DOCUMENT AND THE INFORMATION AND TO PREVENT ITS UNAUTHORISED DISCLOSURE OR USE BY ANY OTHER PERSON. YOU MUST NOT COPY OR REPRODUCE THE DOCUMENT IN ANY FORM AND MUST RETURN THE DOCUMENT IMMEDIATELY UPON DEMAND.

PRODUCT DEVELOPMENT TECHNOLOGIES,INC
One Corporate Drive, Suite 110, Lake Zurich, IL 60047
Ph: 1 847 821 3000 Fax: 1 847 821 3020

DO NOT SCALE - IF IN DOUBT ASK

Part Number:	Rev	Issue Date
*	*	*

Design	Date	Check	Date	Size	Scale	Sheet
SK	2/25/2014	*	2/25/2014	11x17	None	3/10

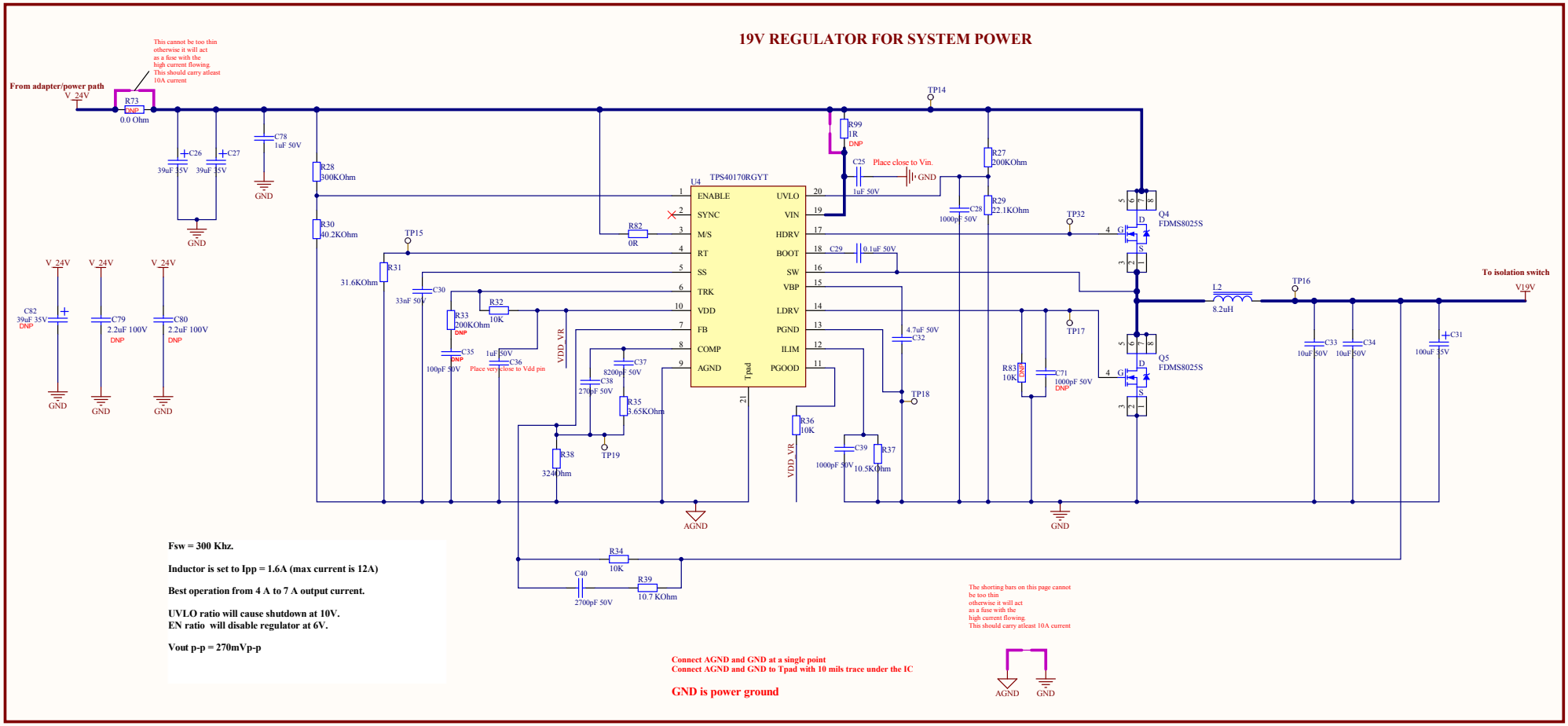

Notes:	Project:	Title:
Texas Wormhole	140146-Little Pig	REGULATOR_19V

RESTRICTED CONFIDENTIAL DOCUMENT
THIS DOCUMENT AND ALL INFORMATION CONTAINED IN THE DOCUMENT IS CONFIDENTIAL. YOU AGREE TO TAKE ALL ACTION NECESSARY TO MAINTAIN THE CONFIDENTIALITY OF THE DOCUMENT AND THE INFORMATION AND TO PREVENT ITS UNAUTHORISED DISCLOSURE OR USE BY ANY OTHER PERSON. YOU MUST NOT COPY OR REPRODUCE THE DOCUMENT IN ANY FORM AND MUST RETURN THE DOCUMENT IMMEDIATELY UPON DEMAND.

PRODUCT DEVELOPMENT TECHNOLOGIES,INC
One Corporate Drive, Suite 110, Lake Zurich, IL 60047
Ph: 1 847 821 3000 Fax: 1 847 821 3020

DO NOT SCALE - IF IN DOUBT ASK

Part Number:	Rev	Issue Date
*	*	*

Design	Date	Check	Date	Size	Scale	Sheet
SK	2/25/2014	*	2/25/2014	11x17	None	4/10

Battery Gauge

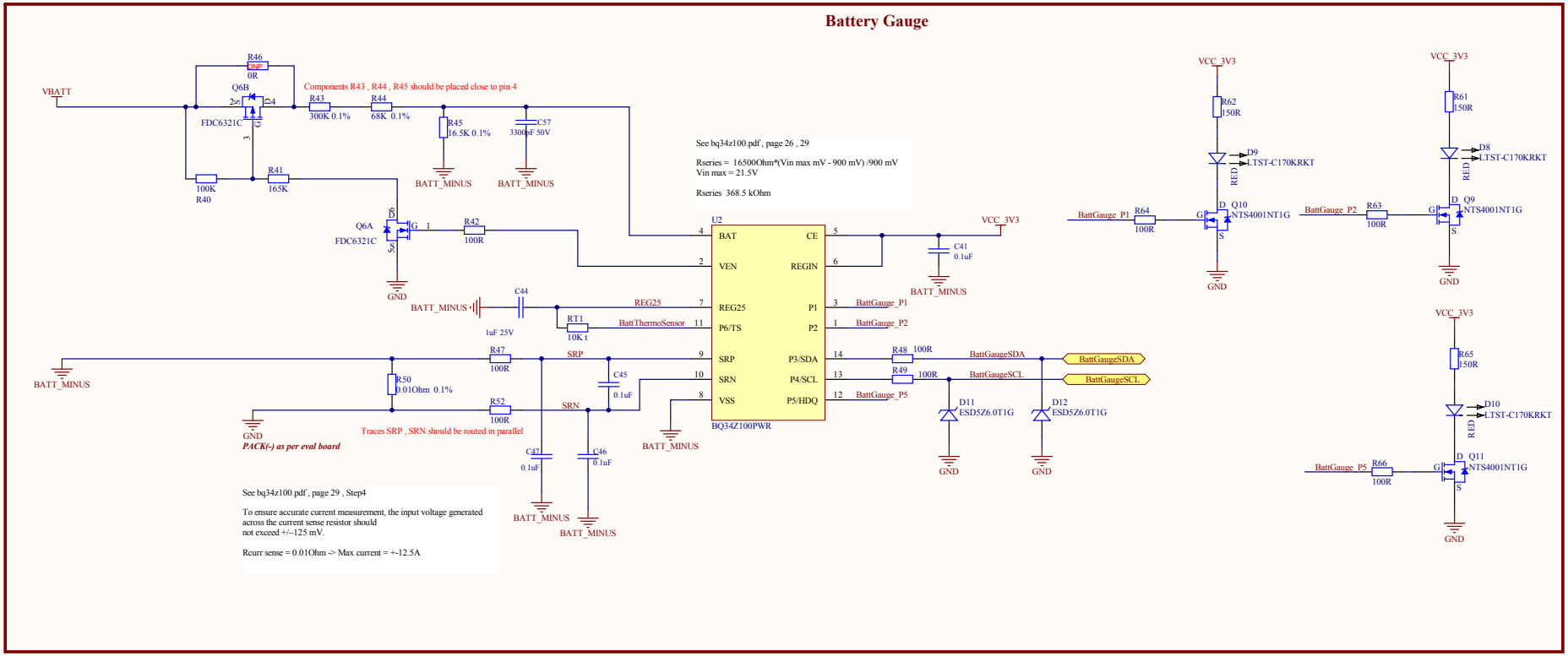

Notes:	Project:	Title:
Texas Wormhole	140146 - Little Pig	GAS GAUGE

RESTRICTED CONFIDENTIAL DOCUMENT

THIS DOCUMENT AND ALL INFORMATION CONTAINED IN THE DOCUMENT IS CONFIDENTIAL. YOU AGREE TO TAKE ALL ACTION NECESSARY TO MAINTAIN THE CONFIDENTIALITY OF THE DOCUMENT AND THE INFORMATION AND TO PREVENT ITS UNAUTHORISED DISCLOSURE OR USE BY ANY OTHER PERSON. YOU MUST NOT COPY OR REPRODUCE THE DOCUMENT IN ANY FORM AND MUST RETURN THE DOCUMENT IMMEDIATELY UPON DEMAND.

PRODUCT DEVELOPMENT TECHNOLOGIES,INC
One Corporate Drive, Suite 110, Lake Zurich, IL 60047
Ph: 1 847 821 3000 Fax: 1 847 821 3020

DO NOT SCALE - IF IN DOUBT ASK

Part Number:	Rev	Issue Date
*	*	*

Design	Date	Check	Date	Size	Scale	Sheet
*	2/25/2014	*	2/25/2014	11x17	None	5/10

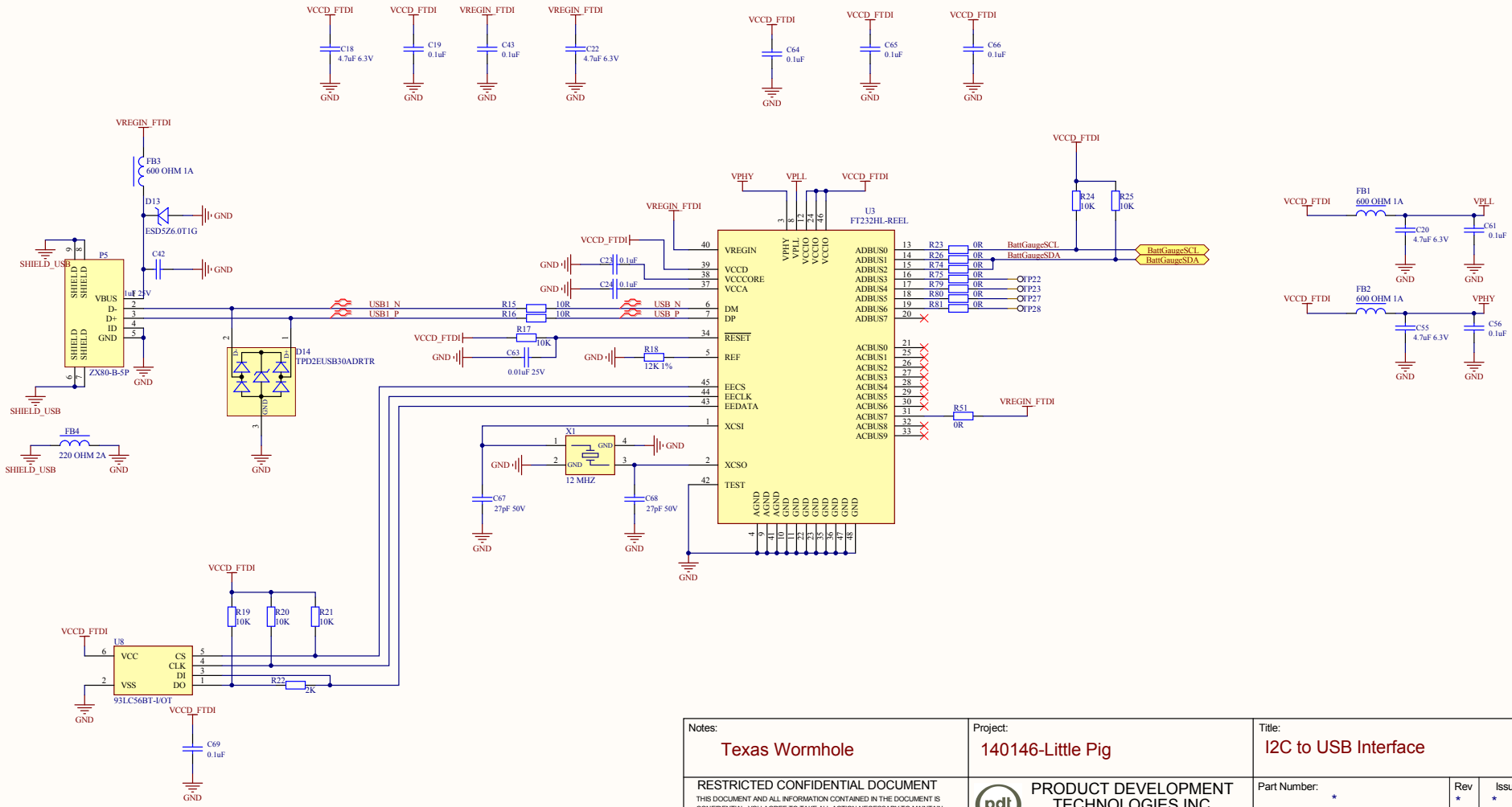

Notes:

Texas Wormhole

RESTRICTED CONFIDENTIAL DOCUMENT

THIS DOCUMENT AND ALL INFORMATION CONTAINED IN THE DOCUMENT IS CONFIDENTIAL. YOU AGREE TO TAKE ALL ACTION NECESSARY TO MAINTAIN THE CONFIDENTIALITY OF THE DOCUMENT AND THE INFORMATION AND TO PREVENT ITS UNAUTHORISED DISCLOSURE OR USE BY ANY OTHER PERSON. YOU MUST NOT COPY OR REPRODUCE THE DOCUMENT IN ANY FORM AND MUST RETURN THE DOCUMENT IMMEDIATELY UPON DEMAND.

Project: 140146-Little Pig

PRODUCT DEVELOPMENT TECHNOLOGIES,INC
One Corporate Drive, Suite 110, Lake Zurich, IL 60047
Ph: 1 847 821 3000 Fax: 1 847 821 3020

DO NOT SCALE - IF IN DOUBT ASK

Title: I2C to USB Interface

Part Number:	Rev	Issue Date
*	*	*

Design	Date	Check	Date	Size	Scale	Sheet
*	2/25/2014	*	2/25/2014	11x17	None	6/10

12V Regulator for Display and Fan

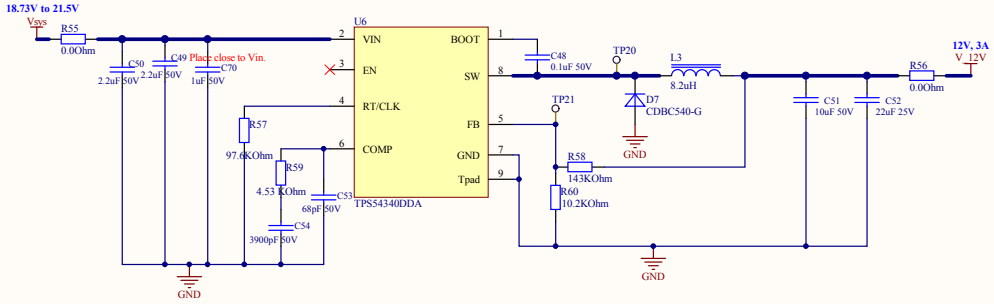

Fsw = 1Mhz

Inductor is set to Ipp = 0.646A (max current is 3A)

Vout p-p = 16.5mVp-p

3.3V, 350mA Regulator

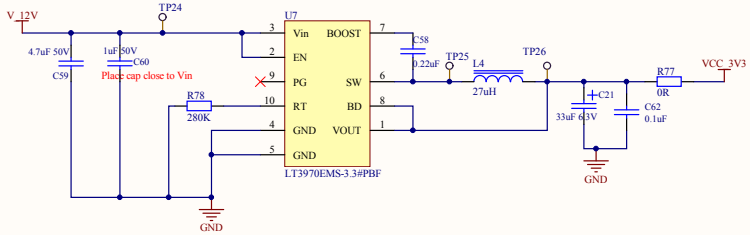

Output = 3.3V, 350mA (max)
Switching Freq = 500 Khz.
Output voltage ripple = +/-60mV
Device is enabled as long as input is present.

Total output current is 54mA for all LED's + 140uA for gas gauge

IC power dissipation max = (12-3.3)*0.1 = 0.87W

DISPLAY AND ETHERNET CONNECTORS

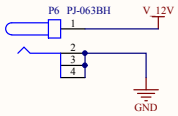

POWER FOR LED DISPLAY

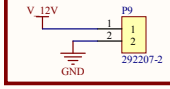

Notes:	Project:	Title:
Texas Wormhole	140146-Little Pig	REGULATORS/MISCELLANEOUS_1

RESTRICTED CONFIDENTIAL DOCUMENT

THIS DOCUMENT AND ALL INFORMATION CONTAINED IN THE DOCUMENT IS CONFIDENTIAL. YOU AGREE TO TAKE ALL ACTION NECESSARY TO MAINTAIN THE CONFIDENTIALITY OF THE DOCUMENT AND THE INFORMATION AND TO PREVENT ITS UNAUTHORISED DISCLOSURE OR USE BY ANY OTHER PERSON. YOU MUST NOT COPY OR REPRODUCE THE DOCUMENT IN ANY FORM AND MUST RETURN THE DOCUMENT IMMEDIATELY UPON DEMAND.

PRODUCT DEVELOPMENT TECHNOLOGIES,INC
One Corporate Drive, Suite 110, Lake Zurich, IL 60047
Ph: 1 847 821 3000 Fax: 1 847 821 3020

DO NOT SCALE - IF IN DOUBT ASK

Part Number:	Rev	Issue Date
*	*	*

Design	Date	Check	Date	Size	Scale	Sheet
SK	2/25/2014	*	2/25/2014	11x17	None	7/10

Note: D0 and D2 are swap for ease of routing
100 Ohm differential pair matched length for all data lines
The data lines need to be 100% matched in lengths and impedance. Wherever necessary use waves.
Follow eval board layout closely.

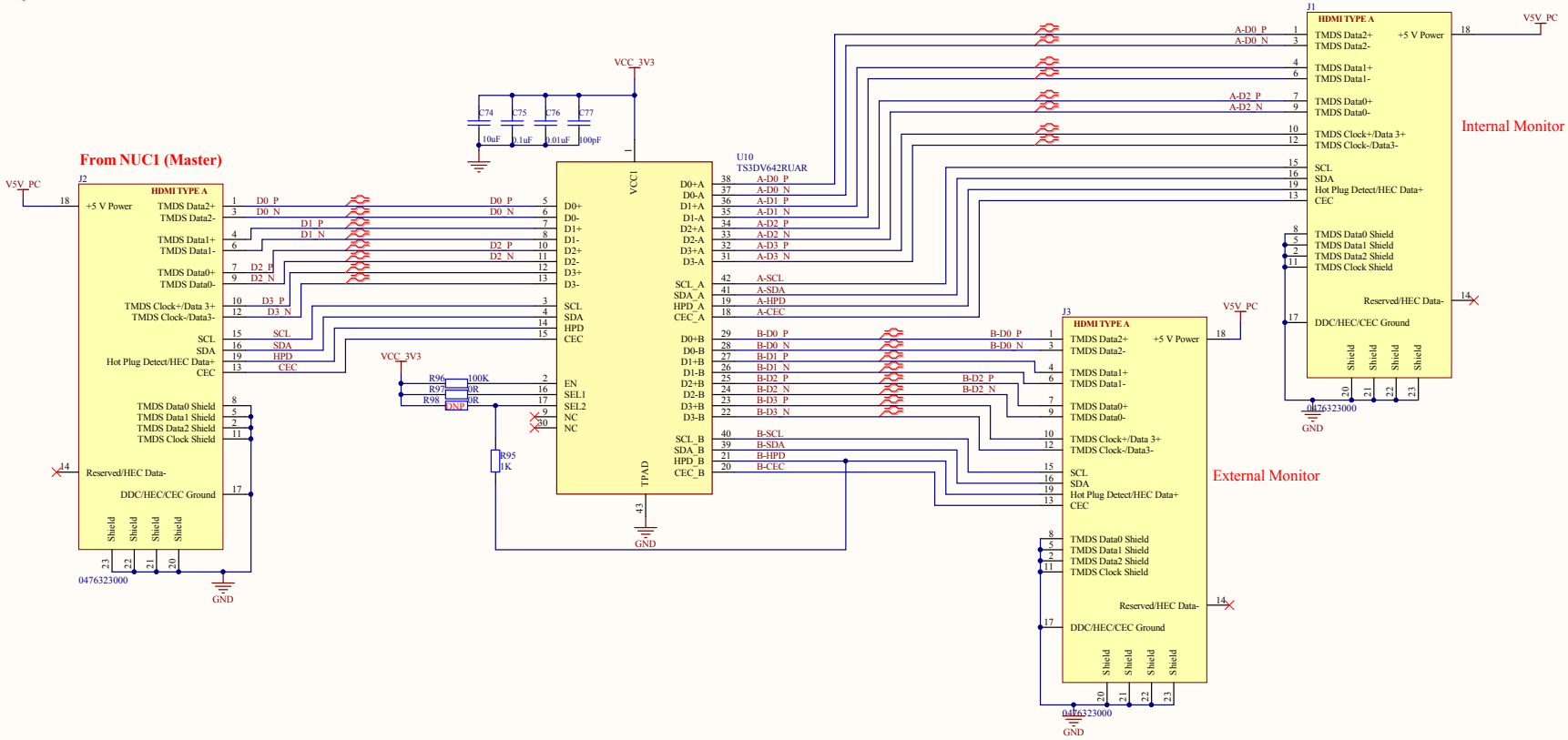

Notes:	Project:	Title:
Texas Wormhole	140146-Little Pig	HDMI MULTIPLEXER

RESTRICTED CONFIDENTIAL DOCUMENT

THIS DOCUMENT AND ALL INFORMATION CONTAINED IN THE DOCUMENT IS CONFIDENTIAL. YOU AGREE TO TAKE ALL ACTION NECESSARY TO MAINTAIN THE CONFIDENTIALITY OF THE DOCUMENT AND THE INFORMATION AND TO PREVENT ITS UNAUTHORISED DISCLOSURE OR USE BY ANY OTHER PERSON. YOU MUST NOT COPY OR REPRODUCE THE DOCUMENT IN ANY FORM AND MUST RETURN THE DOCUMENT IMMEDIATELY UPON DEMAND.

PRODUCT DEVELOPMENT TECHNOLOGIES,INC
One Corporate Drive, Suite 110, Lake Zurich, IL 60047
Ph: 1 847 821 3000 Fax: 1 847 821 3020

DO NOT SCALE - IF IN DOUBT ASK

Part Number:	Rev	Issue Date
*	01	*

Design	Date	Check	Date	Size	Scale	Sheet
KL	2/25/2014	*	2/25/2014	11x17	None	8/10

Reset is inactive as tied to ground.

When NUC1 powers on, +5V_NUC1 goes high to 5V.
This causes 3.3V applied to U5 & U9
Since DIVCODE<8, POL = 0

Output will be held low for tstart+tdelay before it goes high again and output is disabled.

This output is connected to the ON/OFF switch point of the NUC2 and NUC3.

tout for NUC2 100msec

tout for NUC3 200msec

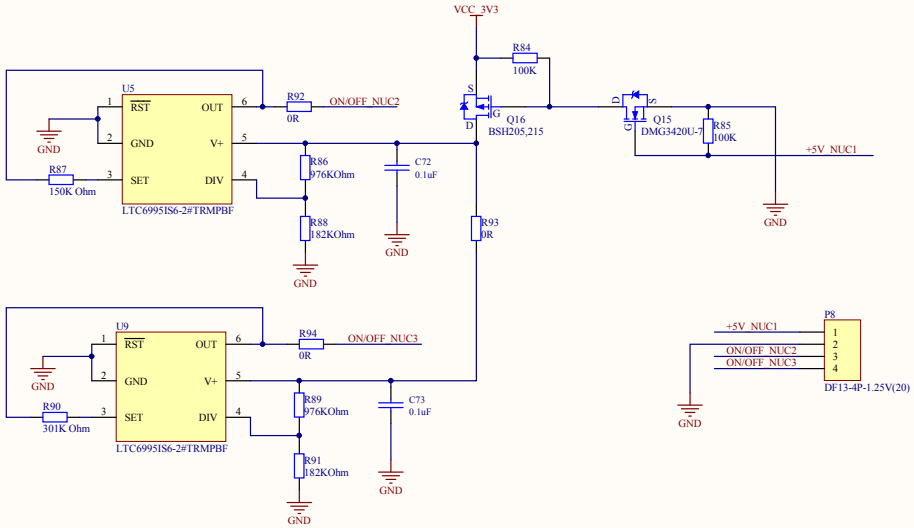

Notes:	Project:	Title:
Texas Wormhole	140146-Little Pig	SEQUENTIAL STARTUP

RESTRICTED CONFIDENTIAL DOCUMENT

THIS DOCUMENT AND ALL INFORMATION CONTAINED IN THE DOCUMENT IS CONFIDENTIAL. YOU AGREE TO TAKE ALL ACTION NECESSARY TO MAINTAIN THE CONFIDENTIALITY OF THE DOCUMENT AND THE INFORMATION AND TO PREVENT ITS UNAUTHORISED DISCLOSURE OR USE BY ANY OTHER PERSON. YOU MUST NOT COPY OR REPRODUCE THE DOCUMENT IN ANY FORM AND MUST RETURN THE DOCUMENT IMMEDIATELY UPON DEMAND.

PRODUCT DEVELOPMENT TECHNOLOGIES,INC
One Corporate Drive, Suite 110, Lake Zurich, IL 60047
Ph: 1 847 821 3000 Fax: 1 847 821 3020

DO NOT SCALE - IF IN DOUBT ASK

Part Number:	Rev	Issue Date
*	01	*

Design	Date	Check	Date	Size	Scale	Sheet
SK	2/25/2014	*	2/25/2014	11x17	None	9/10

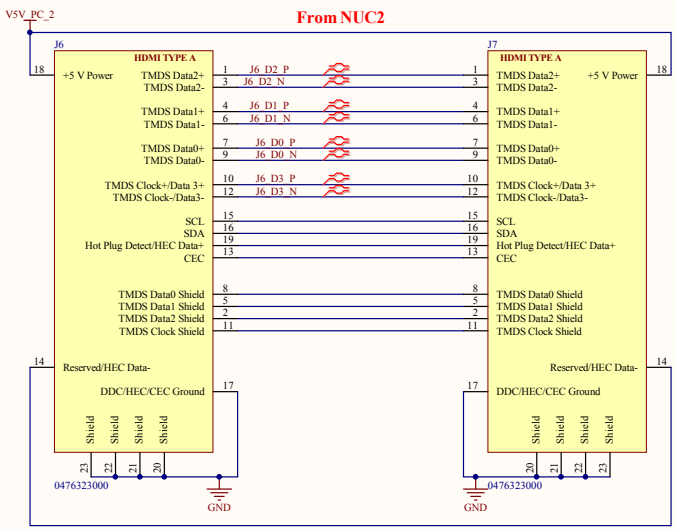

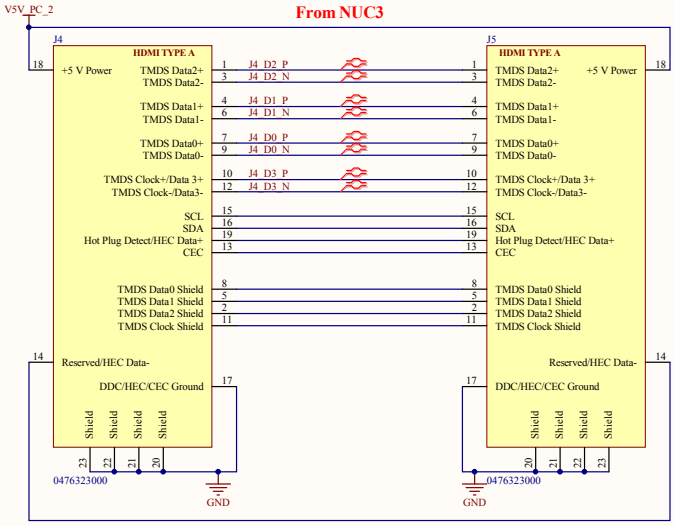

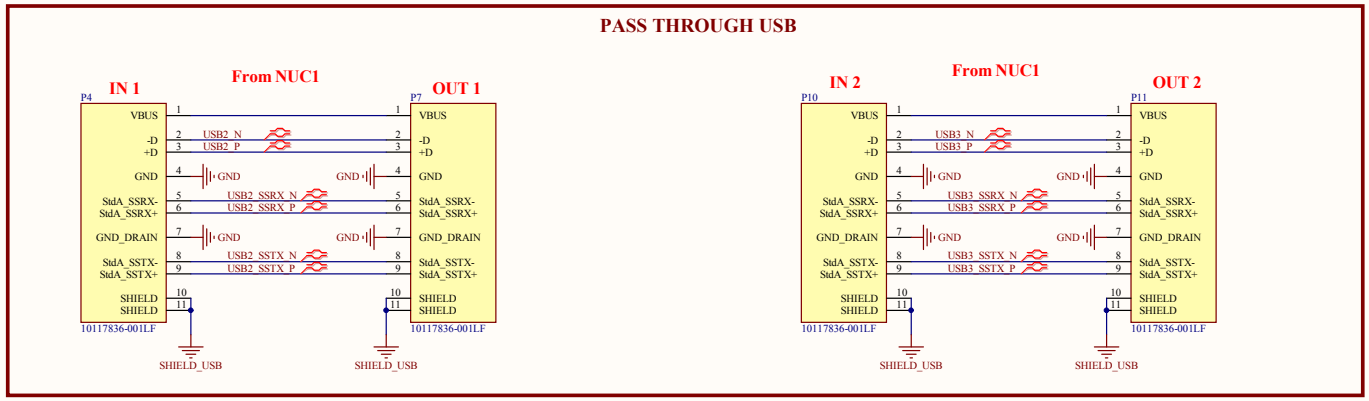

Notes:	Project:	Title:
Texas Wormhole	140146-Little Pig	HDMI/USB pass through

RESTRICTED CONFIDENTIAL DOCUMENT
THIS DOCUMENT AND ALL INFORMATION CONTAINED IN THE DOCUMENT IS CONFIDENTIAL. YOU AGREE TO TAKE ALL ACTION NECESSARY TO MAINTAIN THE CONFIDENTIALITY OF THE DOCUMENT AND THE INFORMATION AND TO PREVENT ITS UNAUTHORISED DISCLOSURE OR USE BY ANY OTHER PERSON. YOU MUST NOT COPY OR REPRODUCE THE DOCUMENT IN ANY FORM AND MUST RETURN THE DOCUMENT IMMEDIATELY UPON DEMAND.

PRODUCT DEVELOPMENT TECHNOLOGIES,INC
One Corporate Drive, Suite 110, Lake Zurich, IL 60047
Ph: 1 847 821 3000 Fax: 1 847 821 3020

DO NOT SCALE - IF IN DOUBT ASK

Part Number:	Rev	Issue Date
*	01	*

Design	Date	Check	Date	Size	Scale	Sheet
SK	2/25/2014	*	2/25/2014	11x17	None	10/10

REVISIONS

REV.	DESCRIPTION	DATE	APPROVED
P3			

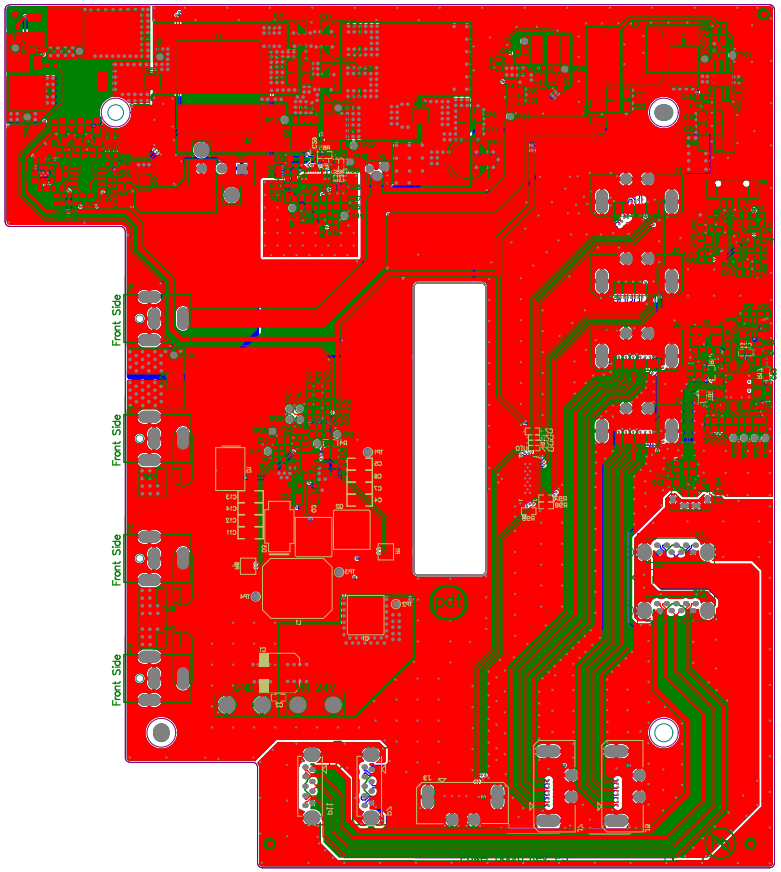

CONTRACT NO.	COMPANY:
140146	PRODUCT DEVELOPMENT TECHNOLOGIES,INC One Corporate Drive, Suite 110, Lake Zurich, IL 60047 Ph: 1 847 821 3000 Fax:1 847 821 3020

APPROVALS	DATE
DRAWN LP	
CHECKED	
ISSUED	

ASSEMBLY DRAWING–TOP
Little Pig Power_Board

SIZE	PDT P/N	DWG. NO.	REV.
B			P3

SCALE: NONE | FILE NAME: Little Pig Power.PcbDoc | SHEET 1 OF 2

THIRD ANGLE PROJECTION

PROPRIETARY
THE DATA, DRAWINGS, AND INFORMATION CONTAINED IN THIS DOCUMENT IS CONFIDENTIAL AND THE SOLE PROPERTY OF PDT AND MAY NOT BE REPRODUCED, USED, OR DISCLOSED WITHOUT WRITTEN PERMISSION OF AN OFFICER OF PDT
COPYRIGHT 2014

DWG. Little Pig Power.PcbDoc
DATE: 2/25/2014
TIME: 11:29:32 AM
Version Control Number: Not In VersionControl