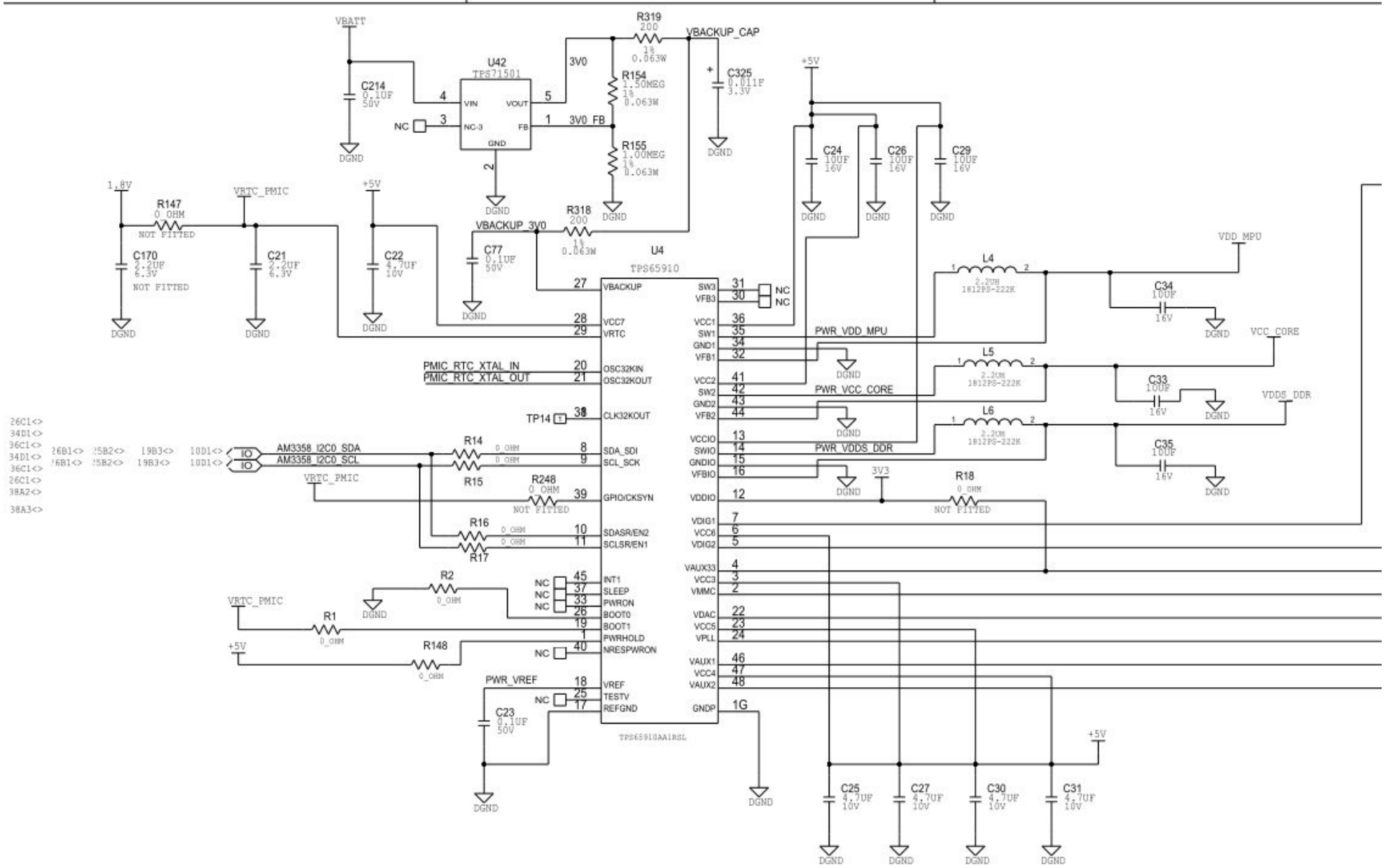

SPREAD THE CAPACITORS ACROSS THE VDD_MPU & VCC_CORE PLANES

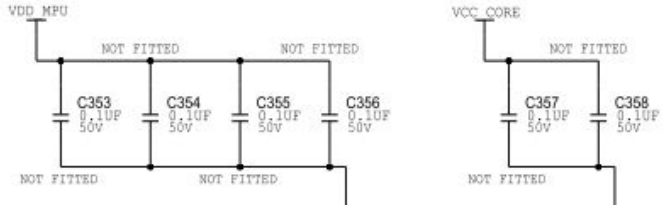

RTC CLOCK

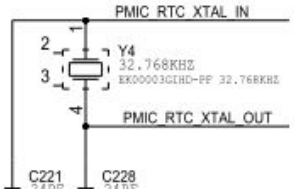

TITLE: POWER MANAGEMENT UNIT FOR AM3358