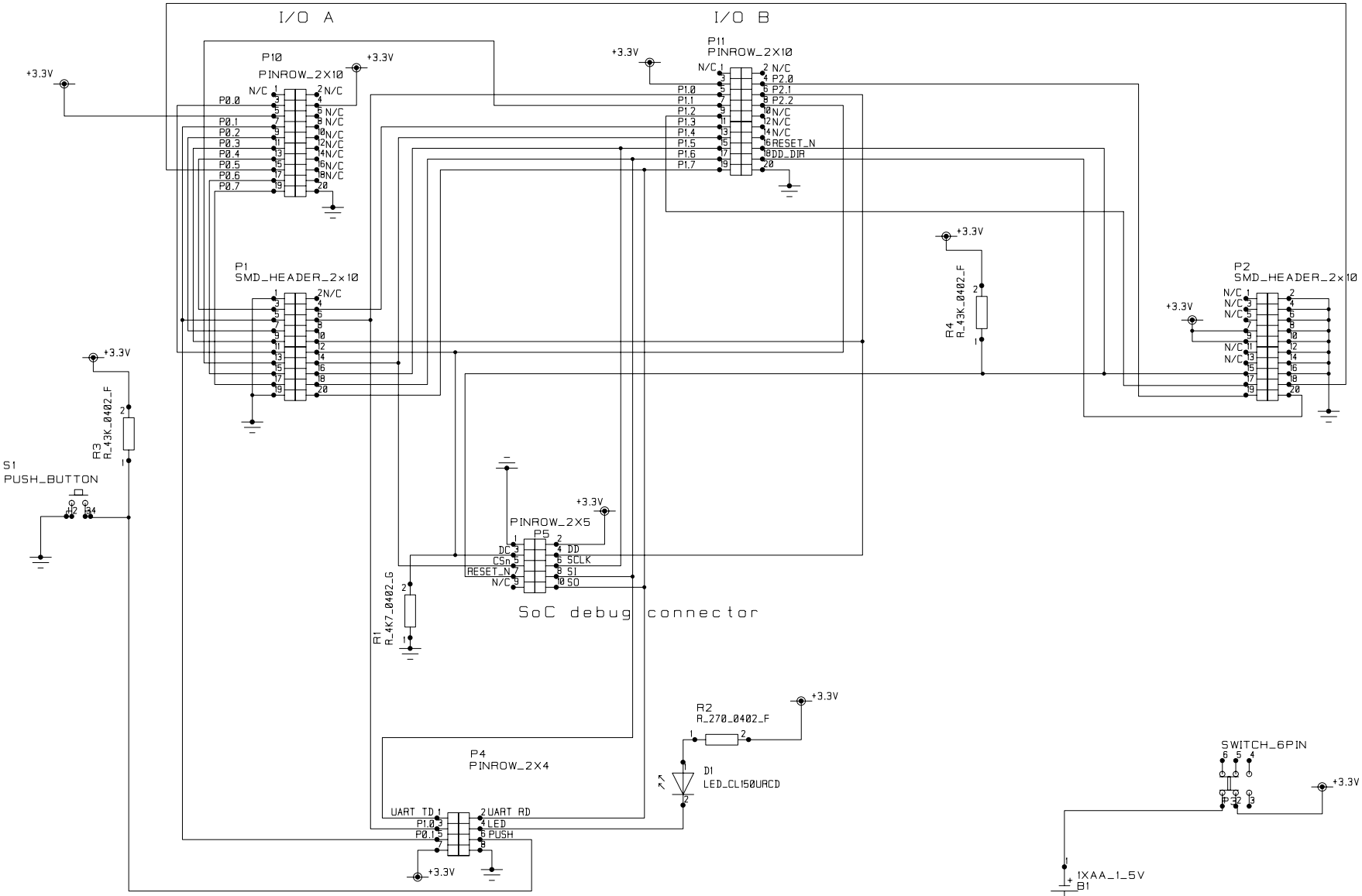

P4:
The jumper between pin 3 and 4 connects LED and P1.0.
The jumper between pin 5 and 6 connects
push button and P0.1.
Can be removed if pins shall be used differently.

FIDUCIAL_MARK FM1

FIDUCIAL_MARK FM2

FIDUCIAL_MARK FM3

CONTRACT NO. 02562		COMPANY NAME CHIPCON AS			
APPROVALS	DATE	DWG SOC_BB			
DRAWN	GJO	SIZE A3	FSCM NO.	DWG NO.	REV. 1.1
CHECKED					
ISSUED		SCALE			SHEET 1 (1)