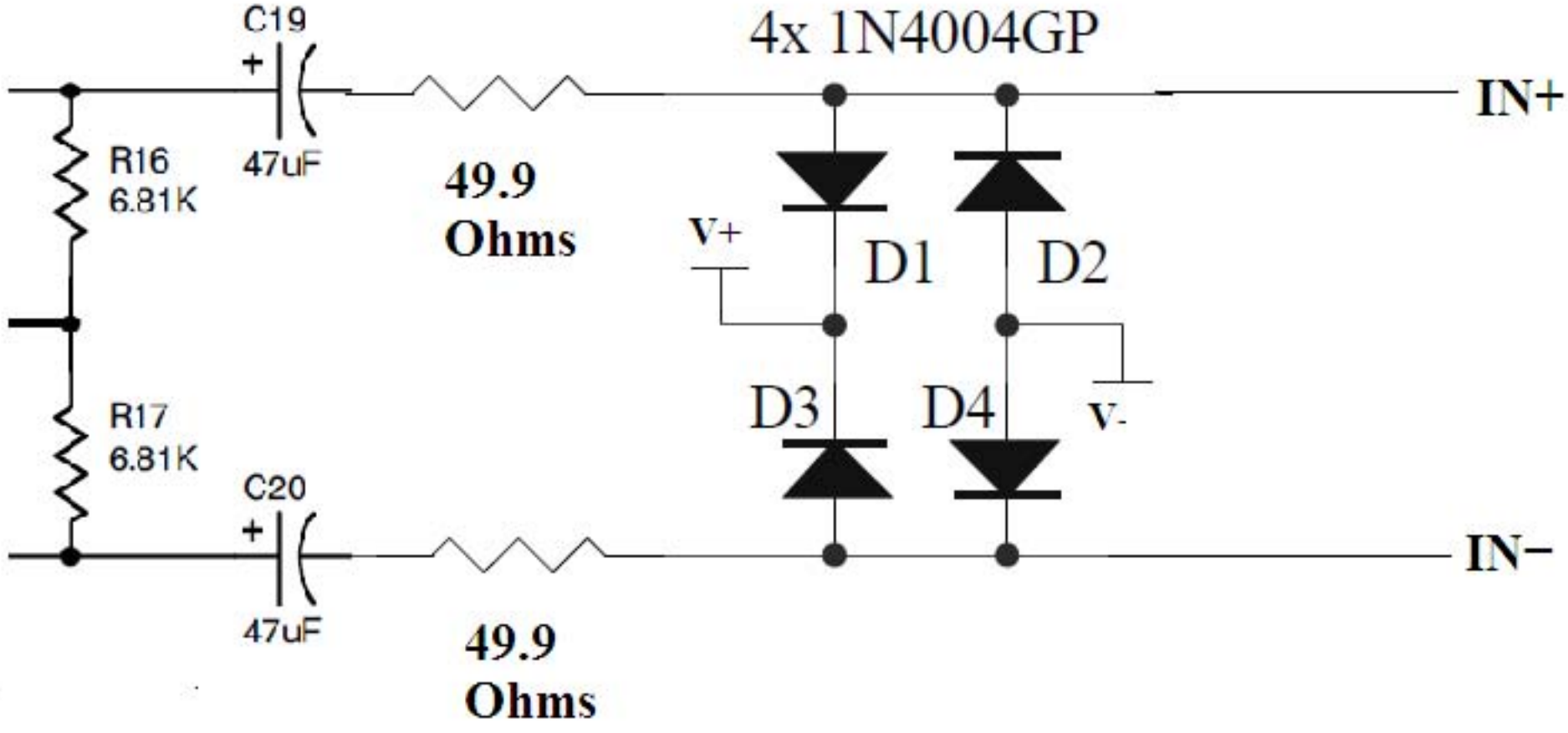
C19
+
47uF
4x 1N4004GP
IN+
R16
6.81K
49.9
Ohms
V+
D1
D2
D3
D4
V-
R17
6.81K
C20
+
47uF
49.9
Ohms
IN−

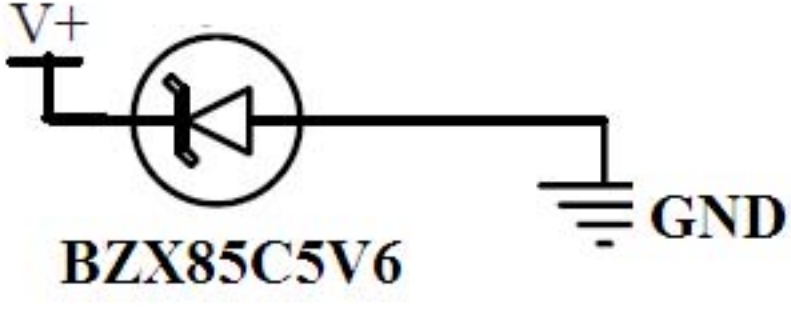
V+
GND
BZX85C5V6

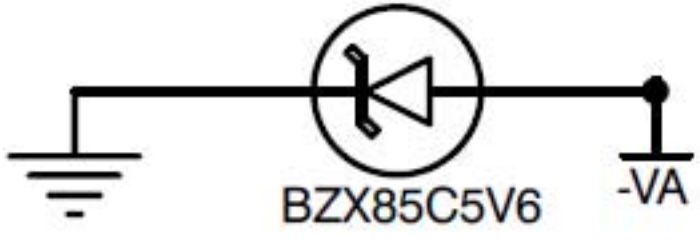
BZX85C5V6
-VA