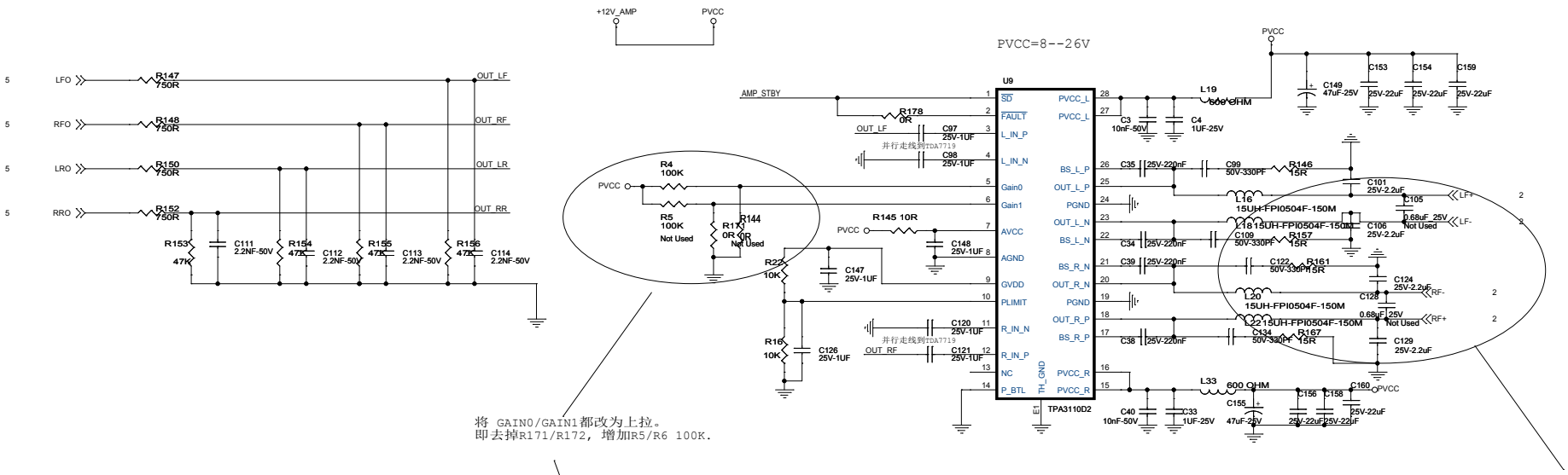


将 GAIN0/GAIN1都改为上拉。
即去掉R171/R172, 增加R5/R6 100K.

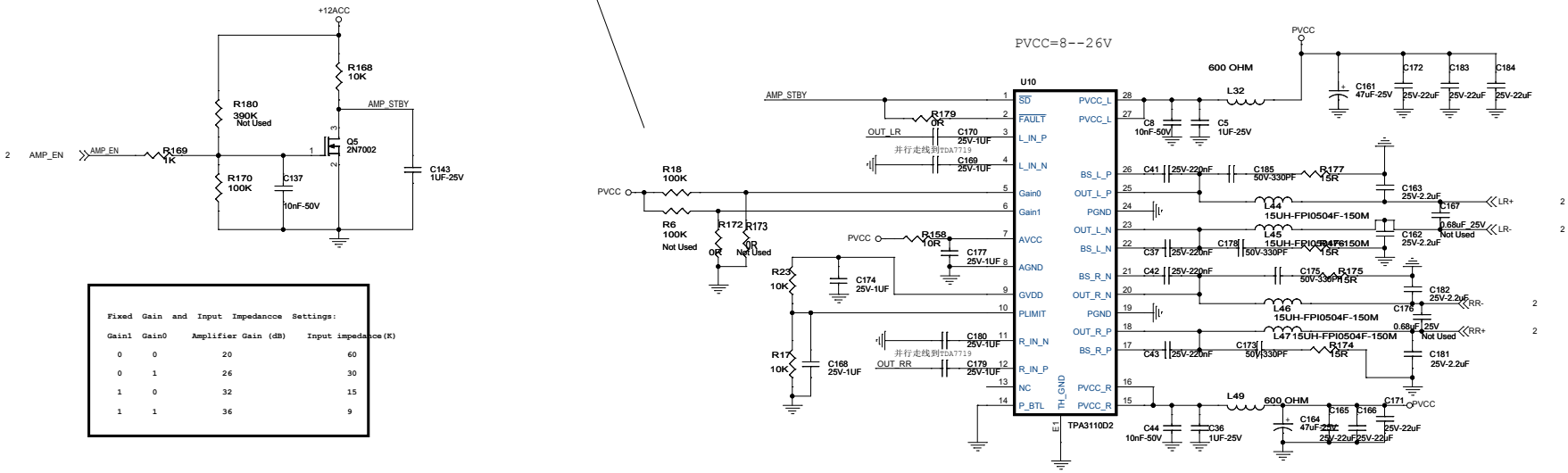


| Fixed Gain and Input Impedance Settings: | | | |
|---|---|---|---|
| Gain1 | Gain0 | Amplifier Gain (dB) | Input impedance(K) |
| 0 | 0 | 20 | 60 |
| 0 | 1 | 26 | 30 |
| 1 | 0 | 32 | 15 |
| 1 | 1 | 36 | 9 |